Docket #0016 Date Filed: 5/14/2012

MORRISON & FOERSTER LLP
1290 Avenue of the Americas
New York, New York 10104
Telephone: (212) 468-8000
Facsimile: (212) 468-7900
Larren M. Nashelsky
Gary S. Lee
Todd M. Goren

Proposed Counsel for Debtors and Debtors in Possession

UNITED STATES BANKRUPTCY COURT
SOUTHERN DISTRICT OF NEW YORK

In re:	)	Case No. 12-
RESIDENTIAL CAPITAL, LLC, et al.,	)	Chapter 11
Debtors.	)	Joint Administration Pending

DEBTORS' MOTION FOR ORDER UNDER BANKRUPTCY CODE SECTIONS 105(a), 345, 363, 364, AND 503(b)(1) AND BANKRUPTCY RULES 6003 AND 6004 AUTHORIZING (I) CONTINUED USE OF CASH MANAGEMENT SERVICES AND PRACTICES, (II) CONTINUED USE OF EXISTING BANK ACCOUNTS, CHECKS, AND BUSINESS FORMS, (III) IMPLEMENTATION OF MODIFIED CASH MANAGEMENT PROCEDURES, (IV) INTERIM WAIVER OF THE INVESTMENT AND DEPOSIT REQUIREMENTS OF BANKRUPTCY CODE SECTION 345, (V) DEBTORS TO HONOR SPECIFIED OUTSTANDING PREPETITION PAYMENT OBLIGATIONS, (VI) CONTINUATION OF INTERCOMPANY TRANSACTIONS, INCLUDING INTERCOMPANY TRANSACTIONS WITH FUTURE DEBTORS, AND GRANTING ADMINISTRATIVE EXPENSE STATUS TO INTERCOMPANY CLAIMS, AND (VII) SCHEDULING A FINAL HEARING ON THE RELIEF REQUESTED

The debtors and debtors in possession in the above-captioned cases (collectively, the "Debtors")[1] hereby move for entry of an order, under sections 105(a), 345, 363, 364, and 503(b)(1) of title 11 of the United States Code (the "Bankruptcy Code") and Rules 6003 and 6004 of the Federal Rules of Bankruptcy Procedure (the "Bankruptcy Rules"), authorizing

[1] The names of the Debtors in these cases and their respective tax identification numbers are identified on Exhibit 1 to the Whitlinger Affidavit (defined below). Additional subsidiaries and affiliates of the Debtors may file Chapter 11 petitions on a rolling basis. As used herein, the term "Debtors" includes any such entities.

1212020120514000000000065

(i) continued use of the Debtors' cash management services and practices, (ii) continued use of the Debtors' bank accounts, checks, and business forms, (iii) implementation of modified cash management procedures and use of certain bank accounts established in connection with use of pre- and post-petition lenders' financing facilities and cash collateral, (iv) the interim waiver of the investment and deposit requirements of Bankruptcy Code section 345, (v) the Debtors to honor certain outstanding prepetition payment obligations, (vi) the continuation of ordinary course intercompany transactions, including intercompany transactions with any Future Debtors (defined herein) in these Chapter 11 cases, and according administrative expense status and priority to postpetition intercompany claims arising from such transactions, and (vii) scheduling a final hearing on the relief requested (the "Motion").[2] In support of the Motion, the Debtors rely upon and incorporate by reference the Affidavit of James Whitlinger, Chief Financial Officer of Residential Capital, LLC, in Support of Chapter 11 Petitions and First Day Pleadings, filed with the Court concurrently herewith (the "Whitlinger Affidavit"). In further support of the Motion, the Debtors, by and through their undersigned counsel, respectfully represent:

JURISDICTION

1. This Court has jurisdiction to consider this Motion under 28 U.S.C. §§ 157 and 1334. This is a core proceeding under 28 U.S.C. § 157(b). Venue of these cases and this Motion in this district is proper under 28 U.S.C. §§ 1408 and 1409. The predicates for the relief requested herein are Bankruptcy Code sections 105(a), 345, 363, 364, and 503(b)(1), Bankruptcy Rules 6003 and 6004 and Local Rule 2015-2.

[2] Creditors and parties-in-interest with questions or concerns regarding the Debtors' Chapter 11 cases or the relief requested in this Motion may refer to http://www.kccllc.net/rescap for additional information.

BACKGROUND

2. On the date hereof (the "Petition Date"), each of the Debtors filed a voluntary petition in this Court for relief under Chapter 11 of the Bankruptcy Code. The Debtors are managing and operating their businesses as debtors in possession pursuant to Bankruptcy Code sections 1107(a) and 1108. No trustee, examiner or statutory creditors' committee has been appointed in these Chapter 11 cases.

3. The Debtors are a leading residential real estate finance company indirectly owned by Ally Financial Inc. ("AFI"), which is not a Debtor. The Debtors and their non-debtor affiliates operate the fifth largest servicing business and the tenth largest mortgage origination and servicing business in the United States. A more detailed description of the Debtors, including their business operations, their capital and debt structure, and the events leading to the filing of these bankruptcy cases, is set forth in the Whitlinger Affidavit.

RELIEF REQUESTED

4. By this Motion, the Debtors seek entry of an order (the "Order"), substantially in the form attached hereto as Exhibit A, pursuant to Bankruptcy Code sections 105(a), 345, 363, 364, and 503(b)(1) and Bankruptcy Rules 6003 and 6004, authorizing: (a) the Debtors to continue use of their cash management services and practices; (b) the Debtors to continue to use their existing bank accounts, checks and business forms; (c) implementation of modified cash management procedures and use of certain bank accounts established in connection with use of pre- and post-petition lenders' financing facilities and cash collateral, (d) an interim waiver of the investment and deposit requirements of Bankruptcy Code section 345; (e) the Debtors to honor specific outstanding prepetition payment obligations; and (f) the continuation of ordinary course intercompany transactions, including intercompany transactions with the Future Debtors,

and according administrative expense status and priority to postpetition intercompany claims arising from such transactions.

5. The Debtors request that, to the extent necessary, the relief sought in this Motion apply to any future debtor (a "Future Debtor") in these jointly-administered cases. The Debtors propose that an affiliated debtor be deemed to be a Future Debtor upon the Court's entry of an order authorizing the joint administration of such Future Debtor's Chapter 11 case jointly-administered with the Chapter 11 cases of the Debtors.

APPLICABLE AUTHORITY

A. The Debtors Should be Authorized to Continue Their Cash Management Practices And Implement The Necessary Modifications in Connection with DIP Financing and Cash Collateral Use

6. The Debtors request that this Court enter an Order authorizing the continued use of the Cash Management System (as defined herein), as modified herein. The Cash Management System is an ordinary course, customary, and essential business system comprising a group of bank accounts and cash management practices, and is similar to cash management systems employed by other large businesses in the mortgage lending industry. However, in this instance, the Debtors' parent company, AFI, provides the Debtors with certain necessary cash management services and access to the system pursuant to an agreed-upon Shared Services Agreement ("SSA"), which is a part of the parties' overall shared services arrangement.[3] Notwithstanding, the Debtors maintain the ability to direct cash from their accounts, maintain centralized information on disbursements to all third parties, and reconcile cash flows in all of their operating accounts in order to segregate cash for the benefit of the financing facilities as

[3] *See* Debtors' Motion For Interim And Final Orders Under Bankruptcy Code Sections 105(a) And 363(b) Authorizing Residential Capital, LLC To Enter Into a Shared Services Agreement With Ally Financial Inc. For The Continued Receipt And Provision Of Shared Services Necessary For The Operation Of The Debtors' Business.

described below. The Cash Management System (defined below) enables the Debtors to more efficiently operate their businesses while, at the same time, make the most efficient use of the cash resources generated by the businesses. It allows net cash receipts to be efficiently managed to yield the highest returns consistent with the investment policy objectives of safety and liquidity.

i. Introduction

7. In the ordinary course of their businesses, the Debtors maintain numerous operating accounts (the "Operating Accounts") that operate wholly independent of the AFI operating accounts.[4] The Operating Accounts include, but are not limited to disbursement/deposit, accounts payable, concentration, collection/clearing and custodial accounts. However, the Operating Accounts are a part of a global cash management system for mortgage operations conducted by both the Debtors and AFI and their respective affiliates (the "Cash Management System"). As of the Petition Date, the Debtors maintain approximately 3,514[5] bank accounts in the United States (collectively, the "Bank Accounts"). A schedule of the Bank Accounts is attached hereto as Exhibit B.

8. The Debtors' cash management practices enable them to operate their businesses more efficiently (as described in the Whitlinger Affidavit) while, at the same time, maximizing the value from cash resources they generate through debt reduction. The Cash Management

[4] The only exception is that the Debtors' payroll processing is now centralized at AFI. In the ordinary course, AFI prefunds the payroll, and then funds are reimbursed by the Debtors to AFI through a transfer of funds from the Debtors' accounts within 48 hours.

[5] The number of bank accounts varies from day to day because the Debtors regularly open and close accounts in the ordinary course of business. In addition to the Bank Accounts, Residential Funding Company, LLC had pledged certain securities and cash to JPMorgan Chase Bank, N.A. ("JPM") as collateral in connection with certain transactions. The collateral is held by JPM, and is not held in any account in the name of Residential Funding Company, LLC.

System allows cash receipts to be preserved efficiently and, through concentration, managed to ensure there remains a maximum amount of liquidity consistent with the Debtors' investment objectives of safety and liquidity. Through the highly integrated Cash Management System, the Debtors operate disbursement accounts by which they are able to track the amounts paid to and from each affiliated participant in the system. In addition, the Cash Management System enables the Debtors to segregate receipts related to their mortgage loan servicing platform.

9. Although complex, due to the nature of the Debtors' businesses and operations, the Cash Management System generally operates as other sophisticated cash management systems operate in companies of similar size and complexity in the mortgage industry. The Debtors receive and collect cash, wires and pre-authorized drafts through various entry points in the Cash Management System, including lockboxes (where they receive borrower payments) and clearing accounts (where they receive payments and sales proceeds from servicers and buyers). The Debtors manage custodial accounts where cash is held for the benefit of the Debtors and various third parties that purchased the loans in both whole loans and securitization transactions. The Debtors primarily receive operating cash through the collection of fees and other amounts related to the servicing of mortgage loans on behalf of others. In addition, for cash balances held in the Debtors' non-custodial operating accounts, in light of the de minimus interest income offered by the depositories on investment sweeps, the Debtors receive advantageous "earnings credit rates" on their cash balances that allow them to partially offset bank service charges. The net value of the credits exceeds the value of the interest that would be earned through investment sweeps. Moreover, in an effort to maximize the return on the funds in their operating accounts, the Debtors have investment programs with certain depositories (JPM and Bank of America) that allow the Debtors to earn higher than standard rates on the funds that remain in certain of the

Debtors' servicing custodial accounts. These investment programs must comply with the terms of the existing servicing agreements.

10. Prior to the Petition Date, encumbered cash of the Debtors flowed through concentration accounts in the Debtors' cash management system pledged to AFI as lender under the Debtors' prepetition senior secured debt facilities. Recently, in order to address concerns of their postpetition lenders, the Debtors, with the consent of both their pre- and post-petition secured lenders, including AFI, put in place certain modifications to the Cash Management System. Specifically, the Debtors established new separate concentration accounts within the Cash Management System for each of their secured lenders, the use of which is subject to the Bankruptcy Court's entry of the Order. These accounts have been put in place in connection with the Debtors' anticipated postpetition implementation of certain modifications to the Cash Management System that are intended to segregate the proceeds of each lender's respective collateral. As a result of such modifications, upon entry of the Order, portions of the Debtors' operating cash, along with cash generated from specific items of collateral, will move into separate concentration accounts for each of the following financing facilities (collectively, the "Financing Concentration Accounts"): a line of credit provided by AFI (the "AFI LOC")[6], a Debt Loan Agreement provided by Ally (the "AFI Revolver"), debtor in possession financing (the "DIP Facilities") pursuant to the Superpriority Debtor-in-Possession Credit and Guaranty Agreement (the "DIP Credit Agreement"), substantially in the form filed on the docket on May [_], 2012, and a revolving facility with Citibank, N.A. (the "Citibank MSR Facility"). Once

[6] AFI is providing the Debtors with postpetition financing on a secured superpriority basis up to $220,000,000, subject to certain conditions, to fund, in a manner consistent with past practices, the repurchase of whole loans from Ginnie Mae pools (the "AFI DIP Facility"). The cash collateral securing the AFI DIP Facility also will be held in the LOC Concentration Account (defined below).

implemented, the Debtors will fund their daily operations and pay ordinary course of business obligations by utilizing unencumbered cash as well as transferring funds from the Financing Concentration Accounts and other operating accounts to disbursement and other accounts, in accordance with the applicable facility.

11. In order to provide an understanding of the flow of funds through the Debtors' accounts, the Debtors provide, with this Motion, three explanatory maps (the "Maps"). The Maps provide a representative depiction of the Cash Management System related to the aspects of their "Servicing" obligations but do not set out each and every Operating Account. *Map 1* illustrates those corporate accounts of Residential Capital, LLC, Residential Funding Company, LLC ("RFC"), GMAC Mortgage, LLC ("GMAC Mortgage"), and Executive Trustee Services, LLC ("ETS"), which collectively reside at the top of the Cash Management System. *Map 2* illustrates the various accounts within the Debtors' primary servicing business, which is performed through GMAC Mortgage. *Map 3* illustrates the various accounts within the Debtors' master servicing business, which is performed through RFC. The Maps are attached hereto as Exhibit C.[7] While the Maps and accompanying notes, by themselves, explain the Cash Management System, the Debtors seek here to provide additional descriptions of certain parts of the complex system.

ii. Types of Non-Servicing Corporate Accounts

12. Concentration Accounts. The Debtors maintain a ResCap[8] level concentration account (Acct. No. 9131) in the Cash Management System (Map 1; #1). Similar concentration

[7] Citation to the Maps and accompanying notes will be in the form of "Map __; #__". In addition, the dotted lines on the maps reflect the modifications to be implemented with the lenders' consent.

[8] ResCap means Residential Capital, LLC.

accounts also exist at GMAC Mortgage (Map 1, #2) and RFC (Map 1, #2). The ResCap level concentration account is indirectly linked to the concentration accounts for RFC and GMAC Mortgage. On a daily basis, if there is excess cash from operations, except for cash pledged to a financing facility, the Debtors aggregate the excess cash into the GMAC Mortgage and RFC concentration accounts. Conversely, if there is an operational cash requirement that is not funded by a Financing Concentration Account, funds are transferred from the GMAC Mortgage and RFC concentration accounts. The recent average daily balance in these accounts was $124,656,710.

13. Exempt Cash Reserve Account. The Cash Management System maintains an interest-bearing, exempt cash reserve account (Map 1, #8). Pursuant to the terms of the AFI Revolver, the Debtors established in New York an account to hold in reserve up to $250 million in unencumbered cash (plus interest earned). Any cash held in this account is utilized to earn credits that can subsequently offset fees charged by the depositing bank against the account (as discussed in greater detail in Section C herein). The average monthly balance in this account is $252 million.

14. Servicer Advance Accounts. (Map 1; #9) There are five (5) accounts contained on Map 1 that are established to collect net cash proceeds from servicer advances in connection with the AFI Revolver. The Debtors concentrate collections on advances pledged to the AFI Revolver from primary servicing and master servicing through four (4) advance collection accounts. These four accounts are then concentrated to a servicer advance concentration account. After entry of the Order, funds from the servicer advance concentration account will then be transferred to the Revolver Concentration Account (Map 1, #4), and collections on advances pledged to the AFI Revolver will be transferred directly from primary servicing and

master servicing to the Revolver Concentration Account. The recent average daily balance in the servicer advance accounts is $121,077,683.

15. Sales Proceeds and Trading Securities Accounts. (Map 1; #6) There are eleven (11) accounts contained on Map 1 that are established to collect net cash proceeds from collateral dispositions undertaken by the Debtors in connection with the AFI Revolver. The Debtors also pledged certain trading securities to AFI as collateral for the AFI Revolver. These securities are held in the Debtors' six (6) custody accounts. When the trading securities generate cash, the Debtors move the cash from these six custody accounts to four (4) related non-custody accounts. The Debtors subsequently move the cash generated from the asset sales and the trading securities into a single concentration account. After entry of the Order, funds from the concentration account will then be transferred to the Revolver Concentration Account (Map 1, #4). Any cash held in the Sales Proceeds and Trading Securities account is utilized to earn credits that can subsequently offset fees charged by the depositing bank against such accounts. The recent average daily balance in these accounts was $222,069.

16. DIP Concentration Account. (Map 1, #7) A single concentration account, which has been established to aggregate cash from the DIP Borrower Accounts (defined herein) and other operating accounts for assets pledged to the DIP Facilities. As long as the conditions to withdrawal of funds from the DIP Concentration Account and the DIP Borrower Accounts, as set forth in the DIP Credit Agreement, are satisfied, and other than during a Dominion Period (as defined in the DIP Credit Agreement), ResCap and the Borrowers will be permitted to withdraw funds from the DIP Concentration Account and the DIP Borrower Accounts, respectively, to fund certain expenditures specifically set forth in the DIP Credit Agreement, in each case, in accordance with the Approved DIP Budget. Funds in the DIP Concentration Account may be

used to finance certain eligible servicer advances to be made by GMAC Mortgage or RFC, and the related reimbursement rights sold and contributed to the Borrowers.

17. Revolver Concentration Account. (Map 1, #4) The modified Cash Management System contains a single concentration account that has been established to aggregate cash from assets pledged to the AFI Revolver including repayments for servicing advances and net sales proceeds from collateral dispositions. Certain servicer advances for both GMAC Mortgage and RFC will be funded by the Revolver Concentration Account and then repaid from the respective corporate operating accounts as collections are made. In addition, certain loan buyouts and operating expenses that are allocated to the AFI Revolver will be funded from the Revolver Concentration Account.

18. Line of Credit Concentration Account. (Map 1, #3) The Debtors have established a single concentration account to collect cash from assets pledged to AFI LOC from four legal entities including GMAC Mortgage, RFC, Passive Asset Transaction LLC and Homecomings Financial LLC. Servicer advances for GMAC Mortgage will be funded by the Line of Credit Concentration Account ("LOC Concentration Account") and then repaid from the respective corporate operating accounts. In addition, certain loan buyouts and operating expenses that are allocated to the LOC will be funded from the LOC Concentration Account.

19. Foreign Currency Settlement Accounts. (Map 1; #5) The Debtors maintain four (4) currency accounts that are used to facilitate their operational activity in foreign currencies. However, the Debtors will not use the Cash Management System to transfer monies from the Debtors to foreign entities after the Petition Date. The average recent balance in these accounts was $2,601,453.

iii. Servicing Practices at GMAC Mortgage, LLC & Residential Funding Company, LLC[9] Accounts

20. Servicing Accounts.[10] The Debtors' primary business relates to the servicing of mortgage loans. Loan servicing functions typically include: all aspects of servicing mortgage loans, including payment processing (the collecting and remitting of mortgage loan payments), customer service communications and activities, collections, making required advances, accounting for principal and interest payments to and other amounts made on the mortgage loans, filing and receiving claims, loss mitigation, default administration, remitting to investors, master servicing, and holding escrow or impound funds for payment of taxes and insurance. Within the servicing business, the Debtors manage approximately 3,340 custodial accounts where cash is held for the benefit of the Debtors and various third parties that purchased the loans in both whole loan and securitization transactions. Specifically, the Debtors manage 2,842 primary servicing custodial accounts and 498 master servicing custodial accounts. The Cash Management System relating to the Debtors' servicing business is set out on *Map 2* in the subset entitled "Primary Servicing High Level Custodial Process" and on *Map 3* in the subset entitled "Master Servicing High Level Custodial Process".

---

[9] GMAC Mortgage is ResCap's core mortgage business and maintains all of the necessary lending and servicing licenses required to perform mortgage operations. RFC has licenses to perform master servicing.

[10] A more thorough description of the Debtors' loan servicing business is discussed in (1) *Debtors' Motion For Interim And Final Orders Pursuant To Sections 105(a), 362, 363, 1107(a), And 1108 Of The Bankruptcy Code (I) Authorizing The Debtors To Continue In The Ordinary Course Of Business (A) Servicing Agency Loans; And (B) Foreclosure Activities Related To Certain Real Estate Owned By Fannie Mae, Freddie Mac, And Ginnie Mae, (II) Authorizing The Debtors To Pay Certain Prepetition Amounts Due To Servicing Vendors And Foreclosure Professionals, And (III) Granting Limited Stay Relief To Enable Borrowers To Assert Related Counter-Claims In Foreclosure Proceedings* and (2) *Debtors' Motion For Interim And Final Orders Pursuant To Sections 105(A), 362, 363, 1107(A) And 1108 Of The Bankruptcy Code (I) Authorizing The Debtors To Continue In The Ordinary Course Of Business (A) Servicing Non-Agency Loans, And (B) Sale Activities Related To Certain Real Estate Owned Property, (II) Granting Limited Stay Relief To Enable Borrowers To Assert Related Counter-Claims In Foreclosure Proceedings*, both of which were also filed on the Petition Date (collectively, the "Servicing Motions").

(a) Servicing Securitized Loans Or Loans Owned By Others

21. Servicing loans for securitization trusts and purchasers of loans acquired in whole loan sales is an important portion of the Debtors' business. As a servicer, the Debtors are responsible for ensuring that borrowers' funds reach investors and other third parties that perform functions on behalf of an investor's loans. The Debtors service certain loans in the capacity as master servicer, primary servicer and other loans in the capacity as sub-servicer. The Debtors' mortgage servicing rights ("MSRs") are generally established in servicing contracts, including, but not limited to, contracts with the securitization trusts, special purpose issuers or third party whole loan purchasers. In exchange for performing primary or master servicing functions, the Debtors receive a servicing fee (which is generally based upon a percentage of the unpaid principal balance of the loans), certain ancillary fees (e.g., late fees, fees associated with payments by phone, and loss mitigation incentive fees) and interest (collectively, the "Servicing Fees"). The Servicing Fees are typically collected from payments made by the borrowers on the loans. Preserving these MSRs, the Servicing Fees and the Debtors' loan servicing platform is critical to maximizing and maintaining the value of the Debtors' estates.

22. The Debtors perform primary and master servicing on behalf of a number of securitization trusts under the terms and conditions of a series of servicing agreements, pooling and servicing agreements, mortgage loan sale and servicing agreements, subservicing agreements, indentures, similar agreements, servicing guides, amendments, and related documents (collectively, the "Servicing Agreements"). Under the Servicing Agreements, the Debtors (a) service mortgage loans held by the trusts in accordance with the terms and conditions thereof, including receiving and posting to such investors custodial accounts the principal and interest receipts thereon, (b) advance principal, interest, taxes and insurance and certain

"property protection" costs with respect to delinquent mortgage loans, and the real estate that the trust or owner acquires as the result of a foreclosure of the loan, unless such amounts are determined to be unrecoverable from the related loans (to the extent required by the specific securitization), (c) perform securities-related computational, reporting and compliance tasks, and (d) pay certain fees and expenses to the trustee and certain other parties to the securitization documents (collectively, the "Servicing Functions").

23. The Debtors' timely performance of the Servicing Functions is essential to prevent material economic damage to all parties with an interest in the securitization trusts and private investors, including the Debtors' estates. The Servicing Functions are important to the Debtors' servicing business, and the Debtors' MSRs, as well as their right to receive reimbursements of prior advances, constitute important estate assets. In addition, the Debtors' continued performance under the Servicing Agreements is necessary to not only maintain the value of the MSRs and the receivables created by prior advances, but also preserve the valuable servicing relationship with the Debtors' counterparties.

(b) Loan Servicing Cash Management

24. Mortgage payments from borrowers collected by the Debtors in connection with performing the Servicing Functions are deposited into either custodial lockboxes or clearing accounts. In the "Primary Servicing High Level Custodial Process" depicted in *Map 2*, the borrowers pay directly into eight (8) accounts (Map 2; #1). With respect to the "Master Servicing High Level Custodial Process" depicted in *Map 3*, borrowers pay the primary servicers, and the primary servicers deposit cash into two (2) clearing custodial accounts (Map 3; #1). From the lockboxes and the collection and clearing custodial accounts, cash is directed by the Debtors into a series of custodial accounts established for principal and interest payments

(the "P&I Payment Clearing" and "P&I Custodial Accounts"), as well as payments for taxes, assessments, property maintenance fees, and insurance with respect to the mortgage property (the "T&I Payments" and "T&I Custodial Accounts," together with the P&I Custodial Accounts, the "Custodial Accounts") (Map 2, #2 & Map 3, #3).

25. In the loan servicing process, the Debtors manage but do not "own" the Custodial Accounts. For each securitization trust or whole loan transaction, there are separate servicing Custodial Accounts at both the primary and master servicing levels. In accordance with the respective Servicing Agreements, funds are periodically remitted from the P&I Custodial Accounts at the master servicing level to applicable custodial distribution clearing accounts, and from there, funds are remitted directly to the trustees of the securitization trusts for payment to the respective noteholders or certificateholders of the securitization trusts. Primary and master servicing may remit directly to investors in the case of whole loan transactions. In the case of certain agency loans, funds are drafted (rather than remitted) directly from the respective P&I Custodial Accounts. In addition, with respect to primary servicing level, the Debtors periodically remit funds from T&I Custodial Accounts to tax authorities and insurance carriers, as required.[11] Payments from the borrowers must be moved from clearing accounts to custodial accounts generally within 48 hours and are not commingled in the Servicing Operating Accounts (defined herein) prior to their movement to the trustees, the taxing authorities or the insurance carriers.

26. The cash directed into the Servicing Operating Accounts, which are non-custodial operating accounts, is (a) money owed to the Debtors for the Servicing Fees, (b) repayment for

[11] The Master Servicing High Level Custodial Process does not maintain any T&I Custodial Account because the primary servicers hold any funds that relate to taxes, assessments, maintenance fees, and insurance.

prior Servicing Advances that were financed by a funding facility, or (c) repayment for prior Servicing Advances made by the Debtors that were not financed.

27. As primary servicer, the Debtors deduct fees (*e.g.*, the Servicing Fees) earned in connection with the servicing of the corresponding loans before borrower payments are transferred from the lockbox and clearing accounts to the appropriate Custodial Accounts for specific investors. As master servicer, the Debtors deduct fees (e.g., the Servicing Fees) earned in connection with the servicing of the related securities before funds are distributed to Trustees or Investors. In addition, the Debtors are reimbursed for amounts they previously advanced for principal, interest, taxes and insurance, and, in accordance with the Servicing Agreements, certain servicing and related advances (e.g., property preservation costs, attorneys' fees and costs incurred in connection with foreclosures) in circumstances where the borrower has failed to satisfy its obligations under the respective mortgage documents (the "Servicing Advances") when the property is liquidated. The Debtors also subservice loans backed by the government-sponsored enterprises and Ginnie Mae that were originated by AFI or Ally Bank. The Servicing Fees and Servicing Advances owed to the Debtors for servicing these loans are taken from the payment clearing account, remitted to AFI, and the Debtors then bill AFI for payment of such amounts.

28. As needed, the Debtors cover shortfalls for P&I Payments and T&I Payments by advancing the funds from their own operating accounts (i.e., Servicing Operating Accounts),[12] LOC Concentration Account, Revolver Concentration Account, or from the DIP Facility accounts. To the extent the payment was made from the Servicing Operating Accounts, the

[12] The Servicing Operating Accounts are reflected in Map 1; #2.

Debtors may then be reimbursed by the LOC Concentration Account, Revolver Concentration Account, or from the DIP Concentration Account.

29. In the ordinary course of business, the Debtors open and close servicing custodial accounts to make payments for principal and interest, taxes, insurance and similar costs with respect to the mortgaged properties. It is critical to the Debtors' operations that they are allowed to continue to maintain the operations of these servicing custodial accounts in the ordinary course of business. Thus, pursuant to the Debtors' request in the Servicing Motions to continue its ordinary course servicing obligations and duties, the Debtors request the authority to maintain, open and close the Custodial Accounts in the ordinary course of business.

30. Additionally, the Debtors request that the Court authorize and direct the Debtors' banks to process and pay all prepetition checks, drafts and transfers relating to funds from the P&I Custodial Accounts (the "P&I Funds"), custodial distribution clearing accounts and the T&I Custodial Accounts (the "T&I Funds"), and to rely upon the Debtors' designation of the P&I Custodial Accounts and T&I Custodial Accounts, all without any duty of further inquiry on the part of the Debtors' banks. Authorizing and directing the Debtors' banks to process, honor and pay all prepetition checks and other forms of transfer and presentment from Custodial Accounts related to P&I Funds and T&I Funds will not prejudice creditors or other parties in interest. Accordingly, the Debtors' banks should be authorized and directed to process, reverse and debit deposits that are returned by payor banks in the ordinary course of business and honor any and all prepetition checks or other transfers related to the P&I Funds, T&I Funds and customer programs including, without limitation, checks or other transfers drawn from P&I and T&I Custodial Accounts or otherwise made in the ordinary course of the Debtors' loan servicing business operations. These payments relate to, *inter alia*, payments for utilities, maintenance,

and professionals who assist in the foreclosure process (i.e., real estate brokers, attorneys, appraisers, title companies, etc.). The fulfillment of these services is essential for the recovery process. Therefore, any interruption in the disposition of servicing-related disbursements (i.e., payments that bounce) could set back foreclosure timelines or hurt the Debtors' relationships with their vendors who assist with property preservation matters.

iv. Modified Practices For DIP Financing and Cash Collateral Cash Management

31. By separate motions, the Debtors have sought authority (i) to obtain superpriority secured postpetition financing, advances and other financial accommodations (the "DIP Facilities") from the DIP lenders in the total aggregate amount of $1,450,000,000, (ii) to obtain postpetition financing from AFI on a secured superpriority basis in an amount equal to $150,000,000, subject to certain conditions, to fund, in a manner consistent with past practices, the repurchase of whole loans from Ginnie Mae pools, and (iii) to use the cash collateral of their prepetition secured lenders. Upon Court approval of the DIP Facilities and the Debtors' use of their prepetition lenders' cash collateral, including AFI's cash collateral, the Debtors will need to begin utilizing the newly-created concentration accounts in the manner provided for herein.

(a) <u>DIP Financing Cash Management</u>

32. The DIP Facilities require that the DIP Borrower Accounts, the DIP Collection Account and the DIP Concentration Account, which each hold proceeds of the DIP collateral, be kept separate and apart from the Debtors' other accounts. Under the DIP Credit Agreement, GMAC Mortgage and RFC are required to remit all collections with respect to Mortgage Loans, Receivables and REO Property (each term as defined in the DIP Credit Agreement; collectively, the "First Lien Collateral") into deposit accounts owned by GMACM Borrower LLC (the

"GMACM Borrower") (the "GMACM Borrower Account") and RFC Borrower LLC (the "RFC Borrower" and together with the GMACM Borrower, the "Borrowers") (the "RFC Borrower Account" and together with the GMACM Borrower Account, the "DIP Borrower Accounts"), respectively, within two business days after collection. Notwithstanding the foregoing, GMAC Mortgage and RFC shall deposit all collections with respect to the Serviced Loans included in the MBS Trust to the MBS Trust Collection Account within two business days after collection, and shall then cause such collections to be remitted directly from the MBS Trust Collateral Collection Account to the applicable DIP Borrower Account no later than two business days after such collections are deposited into the MBS Trust Collection Account (each term as defined in the DIP Credit Agreement). With respect to collections (the "DIP Collections") on First Lien Collateral, (a) that GMAC Mortgage, as primary servicer, collects, the funds will move from lockbox accounts (Map 2, #1), to a collection/clearing account, to custodial accounts (Map 2, #2), to off-balance sheet custodial accounts (Map 2, #3), to the GMACM Borrower Account (Map 2, #4) and (b) that RFC, as master servicer, collects from primary servicers, the funds will flow directly from clearing accounts (Map 3, #1) to the RFC Borrower Account (Map 3, #2).

33. The lockbox accounts, collection/clearing accounts, and/or custodial accounts that the DIP Collections pass through before they are remitted to the DIP Borrower Accounts are not, and will not become, subject to the lien of any third party. Except as contemplated by the preceding paragraph, the Debtors will not permit the DIP Collections to ever flow through any of ResCap's corporate accounts or any other account of the Debtors prior to remitting the DIP Collections to the DIP Borrower Accounts. Any funds passing through these unencumbered lockbox accounts, collection/clearing accounts, and/or custodial accounts that constitute Collateral (as defined in the DIP Credit Agreement) or proceeds of Collateral are at all times

subject to the liens securing the DIP Facilities and will be held in trust for the benefit of the DIP lenders.

34. Funds on deposit in the DIP Borrower Accounts may be swept from time to time to the DIP Concentration Account in accordance with the DIP Credit Agreement. Each time funds in the DIP Borrower Accounts are swept to the DIP Concentration Account, ResCap will become obligated (a) to the GMACM Borrower in the amount swept into the DIP Concentration Account from the GMACM Borrower Account and (b) to the RFC Borrower in the amount swept into the DIP Concentration Account from the RFC Borrower Account. Such intercompany indebtedness will be payable upon demand by the applicable Borrower or, upon the occurrence of an Event of Default under the DIP Credit Agreement (such term as defined therein), by the Collateral Agent. In addition, collections on First Lien Collateral pledged under the DIP Facilities will be remitted to the DIP Concentration Account from the Debtors' other operating accounts.

35. The DIP Concentration Account will be a ResCap segregated account into which only funds swept from the DIP Borrower Accounts will be deposited and no other funds of the Credit Parties (as defined in the DIP Credit Agreement) will be commingled with such funds. Further, the DIP Concentration Account will not be subject to any Lien (as defined in the DIP Credit Agreement), except as specifically set forth in Section 9.01(b) of the DIP Credit Agreement.

36. As long as the conditions to withdrawal of funds from the DIP Concentration Account and the DIP Borrower Accounts, as set forth in the DIP Credit Agreement, are satisfied, and other than during a Dominion Period (as defined in the DIP Credit Agreement), ResCap and the Borrowers will be permitted to withdraw funds from the DIP Concentration Account and the

DIP Borrower Accounts, respectively, to fund certain expenditures specifically set forth in the DIP Credit Agreement, in accordance with the Approved DIP Budget.

37. During an Activation Period (as defined in the DIP Credit Agreement) or a Dominion Period, all funds in the DIP Borrower Accounts and the DIP Concentration Account shall be swept daily into a deposit account established by the RFC Borrower (the "DIP Collection Account"). Upon the occurrence of an Event of Default, the Administrative Agent may, or, at the request of the Requisite Lenders (as defined in the DIP Credit Agreement) to the Borrower Account Bank (as defined in the DIP Credit Agreement) and the Concentration Account Bank (as defined in the DIP Credit Agreement), commencing a Dominion Period, and shall further direct the Borrower Account Bank and the Concentration Account Bank to forward and sweep daily all amounts in the DIP Borrower Accounts and the DIP Concentration Account to the DIP Collection Account. During a Dominion Period, after written notice from the Collateral Agent, all funds in the DIP Collection Account shall be applied to outstanding DIP obligations in accordance with the DIP Credit Agreement.

38. The DIP Borrower Accounts, the Concentration Account and the Collection Account will each be subject to a Deposit Control Account Agreement (as defined in the DIP Credit Agreement) in favor of the Collateral Agent for the benefit of the Secured Parties under the DIP Facilities.

39. The Borrowers shall not establish any new bank accounts, deposit accounts, checking accounts, money market funds, certificates of deposit or other similar accounts or financial instruments accounts, other than the DIP Borrower Accounts and the Collection

Account, without the prior written consent of the Administrative Agent,[11] and any new accounts will be subject to a control agreement satisfactory to the Collateral Agent.

40. The Debtors request that all financial institutions in which (i) the DIP Borrower Accounts, (ii) the DIP Concentration Account, (iii) the Collection Account, or (iv) any other deposit accounts, lockboxes, blocked accounts or other accounts of any of the Debtors holding the proceeds of any of the collateral securing the DIP Facilities are located be authorized and directed to comply with any request of the Collateral Agent to turn over to the Collateral Agent all funds therein. Moreover, the depositary banks are authorized to rely upon the directions of the Debtors and the Collateral Agent in accordance with this Order and the relevant Deposit Account Control Agreements (as defined in the DIP Credit Agreement). Under the Deposit Account Control Agreements, such financial institutions shall waive all rights to setoff or deduction of any kind, other than certain limited rights as agreed in section 4 of the Deposit Account Control Agreements.

(b) Cash Collateral Cash Management

41. As required under the cash collateral agreement with AFI and the holders of the junior secured bonds, the Debtors will be similarly required to segregate the cash related to assets pledged to the AFI Revolver and the AFI LOC. As cash is collected for advances, repurchases, fee income and other inflows pledged to these distinct funding facilities, the cash will be transferred from the Debtors' operating accounts to the Revolver Concentration Account and the LOC Concentration Account. As noted above, both the Revolver Concentration Account and the

[11] The "Administrative Agent" means Barclays Bank PLC, in its capacity as administrative agent under the DIP Credit Agreement for a syndicate of financial institutions.

LOC Concentration Account will fund/reimburse certain additional servicer advances, certain loan repurchases, a share of operating expenses and other expenditures.

42. Moreover, as required under the cash collateral agreement with Citibank, the Debtors will be required to segregate the cash related to collections from assets pledged to the Citibank MSR Facility. As cash is collected for fee income and other inflows pledged to the Citibank MSR Facility, the cash is transferred from the Debtors' operating accounts to the Citibank MSR Concentration Account. The Citibank MSR Concentration Account will fund/reimburse certain additional servicer advances and a share of operating expenses.

43. Finally, as required under the cash collateral agreement with the Federal National Mortgage Association ("FNMA"), the Debtors will continue to collect repayments on FNMA advances from those off balance sheet custodial accounts, which are used to aggregate repayment of third party financing facilities (Map 2, #3), and remit the same to a FNMA-controlled account (the "FNMA EAF Collection Account"). As new advances are created on FNMA assets, the Debtors will make a draw from the FNMA facility to the extent the facility is under the borrowing limit.

44. The cash flow structure described above and implemented pursuant to the terms of the DIP Credit Agreement and the aforementioned cash collateral agreements (the "Funding Facilities Cash Flow Structure") is reasonable and prudent because it segregates each lender's collateral and minimizes the risk of collateral proceeds being inadvertently commingled. Accordingly, the Debtors request that the Court authorize the Debtors to utilize the Funding Facilities Cash Flow Structure during these Chapter 11 cases in the manner described herein and as contemplated by the terms of the DIP Credit Agreement and the other cash collateral agreements.

45. The continued use of the Cash Management System during the pendency of these Chapter 11 cases is essential to the Debtors' business operations and the goal of maximizing value. Requiring the Debtors to adopt a new cash management system at this early and critical stage would be expensive, logistically challenging, impose unnecessary administrative burdens, and cause undue disruption. Any such disruption would adversely (and perhaps irreparably) affect the Debtors' ability to reorganize and/or maximize estate values for the benefit of creditors and other parties in interest. Consequently, utilizing the Cash Management System, as modified, without disruption is essential to the Debtors' ongoing operations and in the best interests of the Debtors, their estates, creditors, and other interested parties.

v. Additional Forms of Relief Related to Modified Cash Management Practices

46. The Debtors further request that they be authorized to implement (consistent with the terms of the SSA) such reasonable changes to the Cash Management System as the Debtors may deem necessary or appropriate, including closing any of the Bank Accounts or opening any additional Bank Accounts following the Petition Date (the "New Accounts"), wherever the Debtors deem that such accounts are needed or appropriate, and whether or not the banks in which the accounts are opened are designated depositories in the Southern District of New York; *provided, however,* that the Borrowers shall not establish any New Accounts, other than the DIP Borrower Accounts and the Collection Account, without the prior written consent of the Administrative Agent, and any New Accounts of the Borrowers will be subject to a control agreement satisfactory to the depositary bank and the Collateral Agent. Notwithstanding the foregoing, any New Account that the Debtors open will be (a) with a bank that is organized under the laws of the United States of America or any state therein, and that is insured by the Federal Deposit Insurance Corporation (the "FDIC") or the Federal Savings and Loan Insurance

Corporation and (b) designated a "debtor in possession" or "DIP" account by the relevant bank. The Debtors request that the relief sought by this Motion extend to any New Accounts and that the Order approving this Motion provide that the New Accounts are deemed to be Bank Accounts and are similarly subject to the rights, obligations, and relief granted in the Order. The Debtors will provide the U.S. Trustee, and AFI, with notice of any New Accounts that are opened. In furtherance of the foregoing, the Debtors also request that the relevant banks be authorized to honor the Debtors' requests to open or close (as the case may be) such Bank Account(s).

47. In addition, and in the interest of maintaining the continued and efficient operation of the Cash Management System during the pendency of these cases, the Debtors request that all banks (the "Banks") at which the Bank Accounts are maintained be authorized and directed to continue to administer, service, and maintain the Bank Accounts as such accounts were administered, serviced, and maintained prepetition, without interruption and in the ordinary course, and to pay any and all checks, drafts, wires, automated clearinghouse transfers, electronic fund transfers, or other items presented, issued, or drawn on the Bank Accounts (collectively, the "Debits") on account of a claim arising on or after the Petition Date so long as there are sufficient funds in the relevant Bank Accounts.

48. The Debtors further request that the Banks be restrained from honoring any Debit presented, issued, or drawn on any Bank Account on account of a claim arising before the Petition Date (a "Prepetition Debit") unless the payment of such claim: (a) has been authorized by an order of this Court, (b) has been directed by the Debtors and not otherwise prohibited by a "stop payment" request received by the relevant Bank from the Debtors, and (c) is supported by sufficient funds in the relevant Bank Account. The Debtors request that the Banks be authorized

to rely on the representations of the Debtors as to which Debits are authorized to be honored or dishonored, whether or not such Debits are dated prior to, on, or subsequent to the Petition Date, and whether or not the Bank believes the payment is authorized by an order of the Court.

49. Concurrently with the filing of this Motion, the Debtors filed motions requesting authority to pay, in their sole discretion and in the ordinary course of their businesses, certain prepetition obligations to employees and certain critical vendors and service providers. With respect to some of this debt, the Debtors issued checks before the Petition Date that have yet to clear the banking system. In other instances, the Debtors will create the relevant Debit once the Court enters an order permitting the Debtors to do so. The Debtors intend to inform the Banks of those Debits that should be so honored. Therefore, the Debtors request that the Banks be authorized to accept and honor all representations from the Debtors as to which Debits should be honored or dishonored. To the extent that the Debtors direct that any Debit be dishonored, the Debtors may issue replacement Debits consistent with the orders of this Court.

50. The Debtors further request that each Bank that maintains one or more Operating Accounts implement reasonable handling procedures designed to effectuate the terms of any Order granting this Motion. The Debtors request that the Order provide that no Bank that implements such handling procedures will be liable to the Debtors or their estates, or otherwise be held in violation of the Order, for honoring a Prepetition Debit or other Debit (a) at the direction of the Debtors to honor such Prepetition Debit or other Debit, (b) in the good faith belief that the Court has authorized such Prepetition Debit or other Debit to be honored, or (c) as a result of an innocent mistake made despite implementation of such handling procedures. This relief is reasonable and appropriate because the Banks are not in a position to verify

independently or audit whether a particular Prepetition Debit may be honored in accordance with an order by the Court order or otherwise.

51. The relief requested by this Motion is consistent with applicable provisions of the Bankruptcy Code. Bankruptcy Code section 363(c)(1) authorizes a debtor in possession to "use property of the estate in the ordinary course of business without notice or a hearing." 11 U.S.C. § 363(c)(1). The authority granted by section 363(c)(1) extends to a debtor in possession's continued use of its customary cash management system and, thus, supports the relief requested. See, e.g., Charter Co. v. Prudential Ins. Co. of Am. (In re The Charter Co.), 778 F.2d 617, 621 (11th Cir. 1985) (indicating that an order authorizing the debtor to employ a cash management system that was "usual and customary in the past" was "entirely consistent" with section 363(c)(1)). Section 363(c) also permits a debtor to continue those "routine transactions" that are necessitated by a cash management system. See, e.g., Amdura Nat'l Distrib. Co. v. Amdura Corp. (In re Amdura Corp.), 75 F.3d 1447, 1453 (10th Cir. 1996). Moreover, Bankruptcy Code section 364(a) authorizes a debtor in possession to obtain unsecured credit and incur unsecured debt in the ordinary course of business without notice and a hearing. See 11 U.S.C. § 364(a). This provision further supports the relief requested and provides the Debtors with the ability, to the extent necessary, to obtain unsecured credit and incur unsecured debt in the ordinary operation of the Cash Management System.

52. Section 105(a) vests in this Court the power to "issue any order, process, or judgment that is necessary or appropriate to carry out the provisions of this title." The continuation of the Cash Management System is essential to the Debtors' reorganization efforts and the efficient administration of these cases. Based on the foregoing, the Debtors believe that maintenance of the existing Cash Management System, together with the modifications agreed o

by the Debtors' secured lenders, is in the best interests of these estates and all parties in interest. The relief requested is, therefore, appropriate under Bankruptcy Code section 105(a).

53. Additionally, Courts in other jurisdictions have granted substantially similar relief in other Chapter 11 cases involving mortgage lenders and servicers. See, e.g., In re Accredited Home Lenders Holding Co., Case No. 09-11516 (MFW) (Bankr. D. Del. June 9, 2009) (Docket No. 145); In re Delta Fin. Corp., Case No. 07-11880 (CSS) (Bankr. D. Del. Dec. 19, 2007) (Docket No. 33); In re American Home Mortgage Holdings, Inc., Case No. 07-11047 (CSS) (Bankr. D. Del. Aug. 7, 2007) (Docket No. 66); In re New Century TRS Holdings, Inc., Case No. 07-10416 (KJC) (Bankr. D. Del. Apr. 11, 2007) (Docket No. 180).

B. The Debtors Should be Authorized to Maintain Their Bank Accounts and Checks

54. The Debtors further request that this Court authorize the continued maintenance of the Debtors' Bank Accounts, checks, and business forms. The Office of the United States Trustee (the "U.S. Trustee") has established certain operating guidelines for debtors in possession in order to supervise the administration of Chapter 11 cases (the "U.S. Trustee Guidelines"). The U.S. Trustee Guidelines require Chapter 11 debtors to, among other things:

> (a) close all modified bank accounts and open new bank accounts that are designated as debtor in possession accounts ("DIP Accounts");
>
> (b) establish and maintain one DIP Account solely for the purpose of setting aside estate monies required for the payment of taxes (including federal, state, and local payroll taxes);
>
> (c) establish and maintain a separate DIP Account for cash collateral; and
>
> (d) obtain and utilize new checks for all DIP Accounts that bear the designation "Debtor in Possession" and contain other information about the Debtors' Chapter 11 cases.

These requirements are designed to provide a clear line of demarcation between a debtor's prepetition and postpetition transactions and operations, and to prevent the inadvertent postpetition payment of prepetition claims against the debtor.

55. Pursuant to Bankruptcy Code sections 105(a) and 363, the Debtors hereby seek a waiver of these requirements and the authority to continue using their modified bank accounts. The Bank Accounts include the more than 3,514 accounts, as listed on Exhibit B hereto.[13] The Debtors believe that all of the Bank Accounts are in financially stable banking institutions that are insured by the FDIC (up to an applicable limit per Debtor per financial institution). The private custodial accounts are generally maintained at the highest rating agency rated banking institutions. If enforced in these cases, the U.S. Trustee's bank account requirements would cause enormous disruption to the Debtors' business, and would impair the Debtors' efforts to reorganize and to maximize the value of their estates. Indeed, as explained in greater detail above, the Bank Accounts form part of the Cash Management System that the Debtors need to maintain in order to ensure smooth collections and disbursements in the ordinary course.

56. Accordingly, in order to avoid delays in payments to administrative creditors, to ensure that the Debtors' transition into Chapter 11 is as smooth as possible, and to facilitate a successful outcome to these cases, the Debtors seek an Order authorizing the Debtors to maintain and use the Bank Accounts, including, without limitation: (a) to deposit funds in, and withdraw funds from, the Bank Accounts by all usual means, including checks, wire transfers, and other Debits, (b) to pay all ordinary course bank fees in connection with the Bank Accounts, (c) to

[13] The Debtors believe, and have undertaken reasonable efforts to ensure, that **Exhibit B** lists all of the Bank Accounts. In the event that any Bank Account has been inadvertently omitted from **Exhibit B**, the Debtors request that the relief sought by this Motion be deemed to apply to any and all Bank Accounts maintained in the Debtors' names.

perform their obligations under the documents and agreements governing the Bank Accounts, and (d) to treat the Bank Accounts for all purposes as debtor in possession accounts.

57. In sum, subject to a prohibition against honoring Prepetition Debits, the Debtors request that (a) the Bank Accounts be deemed to be debtor in possession accounts and (b) the Court authorize the maintenance and continued use of the Bank Accounts, in the same manner and with the same account numbers, styles and document forms as those employed before the Petition Date.

58. The Debtors also seek a waiver of the requirement to establish specific bank accounts for tax payments. The Debtors believe that they can pay their tax obligations most efficiently out of the modified Bank Accounts, that the U.S. Trustee can monitor adequately the flow of funds into, among, and out of such accounts, and that the creation of new debtor in possession accounts designated solely for tax obligations would be unnecessary and inefficient.

59. The Debtors represent that if the relief requested in this Motion is granted, they will not pay, and each of the Banks will be directed not to pay, any debts incurred before the Petition Date, other than as authorized by this Court.

60. In order to minimize any disruption to the administration of the estates, the Debtors also seek authorization to continue using all checks and other banking forms substantially in the forms modified immediately before the Petition Date, without reference to the Debtors' status as debtors in possession; provided, however, that within the first few weeks of these cases the Debtors will implement charges to their check printing system in order to include a legend referring to the Debtors as "Debtor in Possession" or "DIP".

61. Most parties doing business with the Debtors undoubtedly will be aware of the Debtors' status as debtors in possession as a result of the notoriety of these cases, the press

releases issued by the Debtors, and additional press coverage. Moreover, the Debtors will provide notice of the commencement of these cases to creditors and other parties-in-interest.

62. Requiring the Debtors to immediately change the form of checks and other banking forms would be expensive, unnecessary, and burdensome to the Debtors' estates. Moreover, such changes would be disruptive to the Debtors' business operations and would not confer any benefit upon those dealing with the Debtors. For these reasons, the Debtors request that they be authorized to temporarily use modified checks and other banking forms while they gradually implement modifications to their forms to include the label "Debtor In Possession" on each.

63. In other large, complex and/or well-publicized Chapter 11 cases, such as this, courts in this District routinely waive certain U.S. Trustee Guideline requirements and allow the continued use of cash management systems and prepetition bank accounts employed in the ordinary course of a debtor's prepetition business. See, e.g., In re Eastman Kodak Co., Case No. 12-10202 (ALG) (Bankr. S.D.N.Y. Feb. 16, 2012) (Docket No. 376); In re Grubb & Ellis Co., Case No. 12-10685 (MG) (Bankr. S.D.N.Y. Mar. 16, 2012) (Docket No. 189); In re Hostess Brands, Inc., Case No. 12-22052 (RDD) (Bankr. S.D.N.Y. Jan. 27, 2012) (Docket No. 214); In re Pinnacle Airlines Corp., Case No. 12-11343 (REG) (Bankr. S.D.N.Y. Apr. 23, 2012) (Docket No. 171); In re The Connaught Group, Ltd., Case No. 12-10512 (SMB) (Bankr. S.D.N.Y. Mar. 5, 2012) (Docket No. 103); In re AMR Corp., Case No. 11-15463 (SHL) (Bankr. S.D.N.Y. Feb. 7, 2012) (Docket No. 1052); In re Getty Petroleum Marketing Inc., Case No. 11-15606 (SCC) (Bankr. S.D.N.Y. Jan. 9, 2012) (Docket No. 127); In re Marco Polo Seatrade B.V., Case No. 11-13634 (JMP) (Bankr. S.D.N.Y. Oct. 18, 2011) (Docket No. 201); In re MSR Resort Golf Course LLC, Case No. 11-10372 (SHL) (Bankr. S.D.N.Y. Mar. 2, 2011) (Docket No. 95); In re The

Great Atlantic & Pacific Tea Co., Inc., Case No. 10-24549 (RDD) (Bankr. S.D.N.Y. Feb. 7, 2011) (Docket No. 733); In re Ambac Financial Group, Inc., Case No. 10-15973 (SCC) (Bankr. S.D.N.Y. Dec. 21, 2010) (Docket No. 80); In re Blockbuster Inc., Case No. 10-14997 (BRL) (Bankr. S.D.N.Y. Oct. 20, 2010) (Docket No. 353); In re EnviroSolutions of New York, LLC, Case No. 10-11236 (SMB) (Bankr. S.D.N.Y. Apr. 1, 2010) (Docket No. 83); In re Loehmann's Holdings, Inc., Case No. 10-16077 (REG) (Bankr. S.D.N.Y. Dec. 6, 2010) (Docket No. 141); In re General Growth Properties, Inc., Case No. 09-11977 (ALG) (Bankr. S.D.N.Y. May 14, 2009) (Docket No. 518); In re Extended Stay Inc., Case No. 09-13764 (JMP) (Bankr. S.D.N.Y. July 20, 2009) (Docket No. 189); In re Charter Commc'ns, Inc., Case No. 09-11435 (JMP) (Bankr. S.D.N.Y. Apr. 15, 2009) (Docket No. 195); In re Tronox Inc., Case No. 09-10156 (ALG) (Bankr. S.D.N.Y. Feb. 6, 2009) (Docket No. 146). The courts recognize that when applied in complex Chapter 11 cases, the U.S. Trustee Guidelines are often impractical and potentially detrimental to a debtor's postpetition business operations and restructuring efforts and, therefore it is common to replace the U.S. Trustee Guidelines with an alternative procedure that provides the same protection.

C. The Debtors Should be Granted an Interim Waiver of the Investment and Deposit Requirements of Bankruptcy Code Section 345

64. Bankruptcy Code section 345(a) authorizes a debtor in possession to make deposits or investments of estate money in a manner "as will yield the maximum reasonable net return on such money, taking into account the safety of such deposit or investment." 11 U.S.C. § 345(a). If a deposit or investment is not "insured or guaranteed by the United States or a department, agency, or instrumentality of the United States or backed by the full faith and credit of the United States . . .," section 345(b) provides that the debtor must require that the entity with

which the deposit or investment is made obtain a bond in favor of the United States that is secured by the undertaking of an adequate corporate surety. See 11 U.S.C. § 345(b).

65. The Debtors' investment practices differ as to custodial and non-custodial accounts. The objective of the Debtors' practices is to ensure the safety and preservation of principal while also maintaining adequate liquidity to meet cash flow requirements. The Debtors submit that these practices are extremely conservative and are meant to ensure that the funds therein will maximize return in the most risk adverse manner possible. Moreover, custodial account investments are dictated by the Servicing Agreement.

66. For example, with regards to the non-custodial, operating accounts, the Debtors' investment practices have been guided by the definition of "cash equivalents"[14] in the AFI Revolver and AFI LOC. Historically, since the Debtors have not had a large pool of liquidity, the only viable investment options have been overnight investment funds and automated investment sweeps. In the past year or more, interest rates for these types of investments have been close to zero. As a result, the Debtors' strategy for managing balances has primarily been

[14] "Cash Equivalents" means (i) securities with weighted average maturities of 90 days or less from the date of acquisition issued or fully guaranteed or insured by the United States Government or any agency thereof, (ii) certificates of deposit and eurodollar time deposits with weighted average maturities of 90 days or less from the date of acquisition and overnight bank deposits of any commercial bank having capital and surplus in excess of $500,000,000 and a rating of at least A+ and A1 from S&P and Moody's, respectively, (iii) repurchase obligations of any commercial bank satisfying the requirements of clause (ii) of this definition, having a term of not more than seven days with respect to securities issued or fully guaranteed or insured by the United States Government, (iv) securities with weighted average maturities of 90 days or less from the date of acquisition issued or fully guaranteed by any state, commonwealth or territory of the United States, by any political subdivision or taxing authority of any such state, commonwealth or territory or by any foreign government, the securities of which state, commonwealth, territory, political subdivision, taxing authority or foreign government (as the case may be) are rated at least A by S&P or A by Moody's, (v) securities with weighted average maturities of 90 days or less from the date of acquisition backed by standby letters of credit issued by any commercial bank satisfying the requirements of clause (ii) of this definition or, (vi) shares of 2-a7 money market mutual funds rated AAA by Moody's and S&P that have a weighted average maturity of 90 days or less or similar funds which invest exclusively in assets satisfying the requirements of clauses (i) through (v) of this definition.

associated with using "earnings credits" to offset bank service charges versus earning interest income. The banks have also made this option more desirable by offering higher earnings credit rates that are higher than the rates on the investment sweeps. Accordingly, the average overnight investment has been $0 during the past three months.

67. As it concerns the custodial servicing accounts for primary and master servicing, the Debtors have arrangements at Bank of America and JPMorgan Chase where the banks have an "investment" program in place for custodial balances. For the primary servicing accounts, which reside at JPMorgan, the effective rate as of January 2012 at JPM is a flat 5 bps. For the master servicing accounts, which reside at Bank of America, there is a "placement fee" arrangement for money market deposit accounts, which allows the funds in such accounts to earn a floating rate: 30-day LIBOR minus 9 bps. Interest is calculated once a month based on the average balance for the month. This is mostly applicable to the Master Servicing accounts held at the bank.

68. The Court has discretion to waive the section 345(b) investment and deposit requirements for cause. See 11 U.S.C. § 345(b); 140 Cong. Rec. H10752-01 (Oct. 4, 1994) (section 345(b) investment guidelines may be "wise in the case of a smaller debtor with limited funds that cannot afford a risky investment to be lost, [but] can work to needlessly handcuff larger, more sophisticated debtors"). The Debtors believe that they will be able to demonstrate that their investment practices either comply with the requirements of Bankruptcy Code section 345 or that cause exists to waive such requirements. Accordingly, at this time, the Debtors respectfully request that this Court exercise its discretion and grant an interim waiver, pending a final order on the Motion. The Debtors shall consult with the U.S. Trustee as to their compliance with Bankruptcy Code section 345(b). To the extent the Debtors are not in compliance with

Bankruptcy Code section 345(b) in a period of ninety (90) days, the Debtors will seek additional relief from this Court or make such other arrangements as requested by the U.S. Trustee. In determining whether the "for cause" standard has been met, the Court should consider a "totality of the circumstances," utilizing the following factors:

(a) the sophistication of the debtor's business;

(b) the size of the debtor's business operations;

(c) the amount of the investments involved;

(d) the bank ratings (Moody's and Standard & Poor) of the financial institutions where the debtor in possession funds are held;

(e) the complexity of the case;

(f) the safeguards in place within the debtor's own business of insuring the safety of the funds;

(g) the debtor's ability to reorganize in the face of a failure of one or more of the financial institutions;

(h) the benefit to the debtor;

(i) the harm, if any, to the estate; and

(j) the reasonableness of the debtor's request for relief from section 345(b) requirements in light of the overall circumstances of the case.

In re Serv. Merch. Co. Inc., 240 B.R. 894, 896 (Bankr. M.D. Tenn. 1999).

69. Here, the Debtors submit that any risk to the funds does not require strict adherence to the requirements of section 345(b) of the Bankruptcy Code. Moreover, if granted a waiver, the Debtors will not be burdened with the significant administrative difficulties and expenses relating to opening new accounts in a manner that ensures all of their funds are fully insured or invested strictly in accordance with the restrictions established by section 345 of the Bankruptcy Code.

70. In other large, complex or well-publicized Chapter 11 cases, this Court has liberally construed the requirement of section 345(b) of the Bankruptcy Code that the debtor in

possession obtain a bond from any entity with which their money is deposited or invested. In those instances, this Court has waived the requirements of section 345(b) of the Bankruptcy Code and replaced them with alternative procedures. See, e.g., In re Grubb & Ellis Co., Case No. 12-10685 (MG) (Bankr. S.D.N.Y. Mar. 16, 2012) (Docket No. 189); In re Hostess Brands, Inc., Case No. 12-22052 (RDD) (Bankr. S.D.N.Y. Jan. 27, 2012) (Docket No. 214); In re The Connaught Group, Ltd., Case No. 12-10512 (SMB) (Bankr. S.D.N.Y. Mar. 5, 2012) (Docket No. 103); In re AMR Corp., Case No. 11-15463 (SHL) (Bankr. S.D.N.Y. Feb. 7, 2012) (Docket No. 1052); In re Marco Polo Seatrade B.V., Case No. 11-13634 (JMP) (Bankr. S.D.N.Y. Oct. 18, 2011) (Docket No. 201); In re MSR Resort Golf Course LLC, Case No. 11-10372 (SHL) (Bankr. S.D.N.Y. Mar. 2, 2011) (Docket No. 95); In re Ambac Financial Group, Inc., Case No. 10-15973 (SCC) (Bankr. S.D.N.Y. Jan. 3, 2011) (Docket No. 101); In re Blockbuster Inc., Case No. 10-14997 (BRL) (Bankr. S.D.N.Y. Oct. 20, 2010) (Docket No. 353); In re EnviroSolutions of New York, LLC, Case No. 10-11236 (SMB) (Bankr. S.D.N.Y. Apr. 1, 2010) (Docket No. 83); In re Charter Commc'ns, Inc., Case No. 09-11435 (JMP) (Bankr. S.D.N.Y. Apr. 1, 2009) (interim order) (Docket No. 95). Cause exists for a similar waiver in these cases.

D. The Debtors Should be Authorized to Continue Undertaking Ordinary Course Intercompany Transactions, Including Intercompany Transactions with Any Future Debtors, and Postpetition Intercompany Claims Should be Accorded Administrative Expense Status

71. The Debtors request authorization to continue undertaking ordinary course intercompany transactions, including intercompany transactions with any Future Debtors. In the normal operation of the Debtors' businesses, the Debtors maintain business relationships and undertake transactions with each other (the "Intercompany Transactions"). As a result, there are numerous intercompany claims that reflect intercompany receivables and payments made to each other in the ordinary course of the Debtors' businesses (the "Intercompany Claims"). The

Debtors maintain records of all Intercompany Transactions and can ascertain, trace, and account for all Intercompany Claims.

72. The Intercompany Transactions are ordinary course transactions that are integral to the Debtors' businesses and the function of their Cash Management System. In order to preserve the value of the Debtors' estates and ensure that the businesses of the Debtors and any Future Debtors are not interrupted by these Chapter 11 cases, the Debtors seek approval and authorization to continue to undertake the Intercompany Transactions in the ordinary course and consistent with past practice. Moreover, such relief will not harm the estates. Any attempt by the Debtors to detach a Future Debtor from the Cash Management System and require them to establish and maintain separate cash management systems would be time consuming, costly and could adversely affect the value of the Debtors and the Future Debtor.

73. The Debtors will continue to maintain all receipts, disbursements and records of all transfers within the Cash Management System utilized postpetition. As a result, the Debtors will be able to document accurately the transactions occurring within the Cash Management System, including the Intercompany Transactions, for the benefit of all parties in interest.

74. Furthermore, to ensure that each individual Debtor will not fund, at the expense of its creditors, the operations of another entity, the Debtors respectfully request that, pursuant to Bankruptcy Code sections 503(b)(1) and 364(b), all Intercompany Claims against a Debtor by another Debtor or a Future Debtor arising after the Petition Date be accorded administrative expense status and priority. If all Intercompany Claims are accorded administrative expense status, each entity will continue to bear the ultimate repayment responsibility for the Intercompany Transactions.

75. Section 363(c)(1) of the Bankruptcy Code authorizes the debtor in possession to "use property of the estate in the ordinary course of business without notice or a hearing." 11 U.S.C. § 363(c)(1). The purpose of section 363(c)(1) of the Bankruptcy Code is to provide a debtor in possession with the flexibility to engage in the ordinary course transactions that are required to operate its business without unnecessary oversight from the bankruptcy court or the debtor's creditors. In re Roth American, Inc., 975 F.2d 949, 952 (3d Cir. 1992); In re Nellson Nutraceutical, Inc., 369 B.R. 787, 796 (Bankr. D. Del. 2007); In re Vision Metals, Inc., 325 B.R. 138, 145 (Bankr. D. Del. 2005). For example, postpetition intercompany transactions have been recognized as nothing more than a continuation of the routine transactions that are necessitated by a debtor in possession's modified cash management system. See Amdura Nat'l Distrib. Co. v. Amdura Corp. (In re Amdura Corp.), 75 F.3d 1447, 1453 (10th Cir. 1996). Therefore, the Debtors seek authority, pursuant to section 363(c)(1) of the Bankruptcy Code, to continue to engage in the Intercompany Transactions as a necessary and ordinary part of the Debtors' business.

76. Administrative expense treatment for intercompany transactions, as requested here, has been granted in other comparable Chapter 11 cases in this district. See, e.g., In re Eastman Kodak Co., Case No. 12-10202 (ALG) (Bankr. S.D.N.Y. Feb. 16, 2012) (Docket No. 376); In re Hostess Brands, Inc., Case No. 12-22052 (RDD) (Bankr. S.D.N.Y. Jan. 27, 2012) (Docket No. 214); In re Pinnacle Airlines Corp., Case No. 12-11343 (REG) (Bankr. S.D.N.Y. Apr. 23, 2012) (Docket No. 171); In re Getty Petroleum Marketing Inc., Case No. 11-15606 (SCC) (Bankr. S.D.N.Y. Jan. 9, 2012) (Docket No. 127); In re The Great Atlantic & Pacific Tea Co., Inc., Case No. 10-24549 (RDD) (Bankr. S.D.N.Y. Feb. 7, 2011) (Docket No. 733); In re EnviroSolutions of New York, LLC, Case No. 10-11236 (SMB) (Bankr. S.D.N.Y. Apr. 1, 2010)

(Docket No. 83); In re Loehmann's Holdings, Inc., Case No. 10-16077 (REG) (Bankr. S.D.N.Y. Dec. 6, 2010) (Docket No. 141); In re Charter Commc'ns, Inc., Case No. 09-11435 (JMP) (Bankr. S.D.N.Y. Apr. 1, 2009) (interim order) (Docket No. 95); In re Tronox Inc., Case No. 09-10156 (ALG) (Bankr. S.D.N.Y. Feb. 6, 2009) (Docket No. 146).

F. Bankruptcy Rule 6003 has Been Satisfied and Bankruptcy Rule 6004 Should be Waived

77. Bankruptcy Rule 6003 allows the Court to grant a debtor's request to use, sell, lease, or otherwise incur an obligation regarding property of the estate within the 20 days after the filing of the petition, so long as the debtor can demonstrate that the relief is necessary to avoid immediate and irreparable harm.

78. Bankruptcy Rule 6003 generally precludes the Court from authorizing certain relief until twenty-one days after the petition is filed, except to the extent necessary to prevent "immediate and irreparable harm." Fed. R. Bankr. P. 6003. The Debtors submit that, for the reasons set forth above, the relief requested in this Motion is necessary to avoid immediate and irreparable harm and, accordingly, Bankruptcy Rule 6003 has been satisfied.

79. To successfully implement the foregoing, the Debtors seek a waiver of the notice requirements under Bankruptcy Rule 6004(a) and the fourteen-day stay under Bankruptcy Rule 6004(h).

INTERIM ORDER

80. The Debtors seek the relief requested in this Motion in the form on the attached interim order (the "Interim Order"). Within three (3) business days of the entry of the Interim Order, the Debtors will serve a copy of the Interim Order and this Motion on the Notice Parties (defined herein) and the Banks.

NOTICE

81. Notice of this Motion will be given to the following parties, or in lieu thereof, to their counsel: (a) the Office of the United States Trustee for the Southern District of New York; (b) the office of the United States Attorney General; (c) the office of the New York Attorney General; (d) the office of the United States Attorney for the Southern District of New York; (e) the Internal Revenue Service; (f) the Securities and Exchange Commission; (g) each of the Debtors' prepetition lenders, or their agents, if applicable; (h) each of the indenture trustees for the Debtors' outstanding notes issuances; (i) Ally Financial Inc. and its counsel; (j) counsel to the administrative agent for the Debtors' proposed providers of debtor in possession financing; (k) Nationstar Mortgage LLC and its counsel; and (l) the parties included on the Debtors' list of fifty (50) largest unsecured creditors; and (m) each of the Debtors' depositing banks (collectively, the "Notice Parties").

CONCLUSION

WHEREFORE, the Debtors respectfully request that the Court (i) enter an order substantially in the form annexed hereto as Exhibit A granting the relief requested in the Motion; and (ii) grant such other and further relief to the Debtors as the Court may deem just and proper.

Dated: May 14, 2012
New York, New York

/s/ Larren M. Nashelsky

Larren M. Nashelsky
Gary S. Lee
Todd M. Goren
MORRISON & FOERSTER LLP
1290 Avenue of the Americas
New York, New York 10104
Telephone: (212) 468-8000
Facsimile: (212) 468-7900

Proposed Counsel for Debtors and Debtors in Possession

EXHIBIT A

UNITED STATES BANKRUPTCY COURT
SOUTHERN DISTRICT OF NEW YORK

In re:	)	Case No. 12-
RESIDENTIAL CAPITAL, LLC, et al.,	)	Chapter 11
Debtors.	)	Jointly Administered

INTERIM ORDER UNDER BANKRUPTCY CODE SECTIONS 105(a), 345, 363, 364, AND 503(b)(1) AND BANKRUPTCY RULES 6003 AND 6004 AUTHORIZING (I) CONTINUED USE OF CASH MANAGEMENT SERVICES AND PRACTICES, (II) CONTINUED USE OF EXISTING BANK ACCOUNTS, CHECKS, AND BUSINESS FORMS, (IV) INTERIM WAIVER OF THE INVESTMENT AND DEPOSIT REQUIREMENTS OF BANKRUPTCY CODE SECTION 345, (V) DEBTORS TO HONOR SPECIFIED OUTSTANDING PREPETITION PAYMENT OBLIGATIONS, AND (VI) CONTINUATION OF INTERCOMPANY TRANSACTIONS, INCLUDING INTERCOMPANY TRANSACTIONS WITH FUTURE DEBTORS, GRANTING ADMINISTRATIVE EXPENSE STATUS TO INTERCOMPANY CLAIMS, AND SCHEDULING A FINAL HEARING ON THE RELIEF REQUESTED

Upon the motion (the "Motion")[1] of the Debtors for entry of interim and final orders, under Bankruptcy Code sections 105, 345, 363, 364, and 503(b)(1) and Bankruptcy Rules 6003 and 6004, authorizing (i) the continued use of the Debtors' cash management services and practices, as modified, (ii) the continued use of the Debtors' existing bank accounts, checks, and business forms, (iii) implementation of modified cash management procedures and use of certain bank accounts established in connection with use of pre-and post-petition lenders' financing facilities and cash collateral, (iv) interim waiver of the investment and deposit requirements of Bankruptcy Code section 345, (v) Debtors to honor specified outstanding prepetition obligations, (vi) continuation of ordinary course intercompany transactions, and including intercompany

[1] Capitalized terms not otherwise defined herein shall have the meanings ascribed to such terms in the Motion. Creditors and parties-in-interest with questions or concerns regarding the Debtors' Chapter 11 cases or the relief granted herein may refer to www.kccllc.net/rescap for additional information.

transactions with any Future Debtors, and according administrative expense status to postpetition intercompany claims arising from such transactions, and (vii) scheduling a final hearing on the relief requested; and upon the Whitlinger Affidavit; and it appearing that this Court has jurisdiction to consider the Motion pursuant to 28 U.S.C.§§ 157 and 1334; and it appearing that venue of these Chapter 11 cases and the Motion in this district is proper pursuant to 28 U.S.C. §§ 1408 and 1409; and it appearing that this proceeding on the Motion is a core proceeding pursuant to 28 U.S.C. §157(b); and sufficient notice of the Motion having been given under the particular circumstances; and it appearing that no other or further notice need be provided; and it appearing that the relief requested by the Motion is in the best interests of the Debtors' estates, their creditors, and other parties in interest; and after due deliberation thereon; and sufficient cause appearing therefor, it is hereby

ORDERED, ADJUDGED, AND DECREED THAT:

1. The Motion is GRANTED on an interim basis, as set forth herein.

Cash Management Practices

2. The Debtors are authorized to continue using the Cash Management System, to manage their cash, to pay intercompany payables, including certain prepetition payables referenced in the Motion, to extend intercompany credit, and to otherwise transfer funds by and among the Debtors consistent with past practice, subject to the terms of the DIP Credit Agreement.

3. The Debtors are authorized to implement and utilize the Funding Facilities Cash Flow Structure, as described in the Motion and as contemplated by the terms of the DIP Credit Agreement and the other cash collateral agreements, during these Chapter 11 cases. Subject to the Court's approval of the respective postpetition financing agreements, and in

connection with the Funding Facilities Cash Flow Structure, the Debtors are authorized to use the DIP Concentration Account, the Revolver Concentration Account, the LOC Concentration Account, the Citibank MSR Concentration Account and the FNMA EAF Collection Account, each more particularly described in the Motion.

4. The Debtors are authorized to continue to perform their obligations under the agreements governing such system, and to transfer funds between and among the Debtors and any Future Debtors, and between and among their respective Bank Accounts and other accounts maintained with or by their duly appointed agents and custodians, as and when needed and in the amounts necessary or appropriate to maintain their operations and facilitate the orderly operation of their estates or businesses; provided, however, that such transfers of funds by and among the Debtors and their affiliates are made in accordance with the terms and conditions, and do not impair any parties' rights under any Servicing Agreements, deposit agreements or other similar document, the DIP Credit Agreement or any order governing the Debtors' use of cash collateral or debtor in possession financing facilities.

5. The Debtors shall maintain records of all transfers within the Cash Management System so that all transfers and transactions shall be adequately and promptly documented in, and ascertainable from, the Debtors' books and records, to the same extent as maintained before the commencement of these Chapter 11 cases.

6. The Debtors are authorized to continue operating and maintaining the Custodial Accounts in connection with, and in accordance with, the Servicing Agreements and related documents for sales of whole loans to third parties.

7. The Debtors are authorized to continue to deduct amounts from the Custodial Accounts for the repayment of the Advances.

8. The Debtors' banks are authorized, in the course of providing cash management services to the Debtors, to continue to deduct from the appropriate accounts of the Debtors, the bank's customary fees and expenses associated with the nature of the deposit, cash management and custodial services rendered to the Debtors. The Debtors are further authorized to pay customary prepetition banking and custody fees owed to any of their banks. Any customary postpetition banking and custody fees will have administrative priority.

9. The Debtors' banks are authorized to process, reverse and debit deposits that are returned by payor banks in the ordinary course of business, honor and pay all prepetition checks and transfers related to the P&I Funds, the T&I Funds or otherwise made in the ordinary course of business of loans serviced by the Debtors. The Debtors' banks are authorized to rely on the Debtors' designation of accounts as P&I Custodial Accounts or T&I Custodial Accounts, without any further duty of inquiry.

10. The Debtors shall be authorized to perform each of their Servicing Functions in accordance with the terms and conditions of the Servicing Agreements until the Court enters an order that otherwise addresses such agreements. Without limiting the generality of the foregoing, the Debtors are authorized, but not directed, to make all required Advances and to perform indemnification obligations, as provided under the Servicing Agreements, without further application to, or order of, this Court. In addition, parties to the servicing transactions are authorized, free and clear of any constraints imposed by the Bankruptcy Code, including, without limitation, Bankruptcy Code section 362, to continue any customary prepetition practices of billing, reporting or otherwise making demands on each other as to amounts due and to the extent that the relevant parties continue to agree to do so, of "netting" amounts currently due to and from such parties, provided, however, that with respect to any Mortgage Loans Receivables

and REO Property (each term as defined in the DIP Credit Agreement) that are collateral under the DIP Credit Agreement and any proceeds thereof, there shall be no "netting" without Court authorization.

11. No rights of any entity in connection with a contract or transaction of the kind listed in Bankruptcy Code sections 555, 556, 559, 560 and 561(a), whatever they might or might not be, are affected by the entry of this Order.

12. Nothing in this Order shall limit, expand or otherwise affect any rights and obligations of the Debtors and other parties under any of the Debtors' repurchase agreements, including the obligations, if any, under any repurchase agreements to segregate funds and transfer servicing rights.

13. All banks at which the Debtors maintain bank accounts (the "Banks"), including, without limitation, those accounts listed on **Exhibit B** to the Motion (collectively with any and all other bank accounts maintained by the Debtors, the "Bank Accounts"), are authorized and directed to (a) continue to administer, service, and maintain the Bank Accounts as such accounts were administered, serviced, and maintained before the Petition Date, without interruption and in the usual and ordinary course and (b) to receive, process, honor and pay any and all checks, drafts, wires, automated clearinghouse transfers, electronic fund transfers, or other items presented, issued, or drawn on the Bank Accounts (collectively, the "Debits") on account of a claim arising on or after the Petition Date so long as the Debtors have good funds standing to their credit in the relevant Bank Accounts in accordance with the terms and conditions governing the Cash Management System.

14. The Banks are restrained and prohibited from honoring any Debit presented, issued, or drawn on any Bank Account on account of a claim arising before the

Petition Date (a "Prepetition Debit") unless the payment of such claim (a) has been authorized by an order of this Court, (b) has been directed by the Debtors and not otherwise prohibited by a "stop payment" request received by the relevant Bank from the Debtors, and (c) is supported by sufficient funds in the relevant Bank Account.

15. Subject to the provisions of this Order, the Banks are authorized and directed to rely on the Debtors' representations, instructions and presentations (without any duty of further inquiry) as to which Debits are authorized to be honored or dishonored, whether or not such Debits are dated prior to, on, or subsequent to the Petition Date. To the extent that the Debtors direct that any debit be dishonored, the Debtors may issue replacement Debits.

16. Each Bank that maintains one or more Bank Accounts shall implement customary handling procedures to effectuate the terms of this Order. No Bank that implements such handling procedures shall be liable to the Debtors or their estates, or otherwise held in violation of this Order, for honoring a Prepetition Debit or other Debit (a) at the direction or instruction of the Debtors to honor such Prepetition Debit or other Debit, (b) in the good faith belief, which may be based upon the direction or instruction of the Debtors, that the Court has authorized that such Prepetition Debit or other Debit be honored, or (c) as a result of an innocent mistake made despite implementation of such handling procedures.

17. Each Bank is, subject to and in accordance with the terms and conditions of the Cash Management System, authorized to "charge back" to or deduct from the Debtors' accounts any amounts incurred by the Bank resulting from returned checks or other returned items, and the Debtors are authorized to pay to the Bank any fees and expenses in connection with any such item, in each case, regardless of whether such item was deposited prepetition or postpetition.

18. Any payment from a Bank Account at the Debtors' request made by a Bank prior to the Petition Date (including, but not limited to, an ACH (EFT) that such Bank is or becomes obligated to settle), or any instrument issued by any Bank on behalf of any Debtor pursuant to a "midnight deadline" or otherwise, shall be deemed to be paid prepetition, regardless of whether actually debited from such Bank Account prepetition.

19. Subject to the limitations set forth in paragraph 28 below, the Debtors are authorized to implement such changes to the Cash Management System as the Debtors may deem necessary or appropriate, including, without limitation, closing any of the Bank Accounts or opening any additional Bank Accounts (the "New Accounts"), wherever the Debtors deem that such accounts are needed or appropriate, and whether or not the banks in which such accounts are opened are designated depositories in the Southern District of New York; provided that (a) any New Account shall be (i) with a bank that is organized under the laws of the United States of America or any state therein and that is insured by the FDIC or the Federal Savings and Loan Insurance Corporation and (ii) designated a "debtor in possession" or "DIP" account by the relevant bank, and (b) the Debtors shall provide the U.S. Trustee with notice of any New Accounts. The Banks are authorized and directed to honor the Debtors' requests to open or close (as the case may be) such Bank Accounts or additional bank accounts. The Debtors shall provide notice to the U.S. Trustee, Barclays and AFI of the opening of any New Accounts or the closing of any Bank Accounts.

20. Unless otherwise provided herein, the relief, rights, and responsibilities provided for in this Order shall be deemed to apply to any and all Bank Accounts, whether or not such Bank Accounts are listed on **Exhibit B** to the Motion and including, without limitation, any New Accounts.

DIP Cash Management

21. The DIP Collection Account, DIP Borrower Account and the DIP Concentration Account (each defined herein), which each hold proceeds of the collateral securing the DIP Facilities shall be kept separate and apart from the Debtors' other accounts. GMAC Mortgage and RFC shall remit all collections with respect to Mortgage Loans, Receivables and REO Property (each term as defined in the DIP Credit Agreement; collectively, the "First Lien Collateral") into deposit accounts owned by GMACM Borrower LLC (the "GMACM Borrower") (the "GMACM Borrower Account") and RFC Borrower LLC (the "RFC Borrower" and together with the GMACM Borrower, the "Borrowers") (the "RFC Borrower Account" and together with the GMACM Borrower Account, the "DIP Borrower Accounts"), respectively, within two business days after collection. Notwithstanding the foregoing, GMACM and RFC shall deposit all collections with respect to the Serviced Loans included in the MBS Trust to the MBS Trust Collection Account within two business days after collection, and shall then cause such collections to be remitted directly from the MBS Trust Collection Account to the applicable DIP Borrower Account no later than two business days after such collections are deposited into the MBS Trust Collection Account (each term as defined in the DIP Credit Agreement). With respect to collections (the "DIP Collections") on First Lien Collateral, (a) that GMACM, as primary servicer, collects, the funds shall move from lockbox accounts (Map 2, #1),[2] to a collection/clearing account, to custodial accounts (Map 2, #2), to off-balance sheet custodial accounts (Map 2, #3), to the GMACM Borrower Account (Map 2, #4) and (b) that RFC, as master servicer, collects from primary servicers, the funds shall flow directly from clearing accounts (Map 3, #1) to the RFC Borrower Account (Map 3, #2).

[2] Map references pertain to those included in the Motion.

22. The lockbox accounts, collection/clearing accounts, and/or custodial accounts that the DIP Collections pass through before they are remitted the DIP Borrower Accounts are not, and shall not be, subject to the lien of any third party. Except as provided in paragraph 21, the Debtors shall not permit the DIP Collections to ever flow through any of ResCap's corporate accounts or any other account of the Debtors prior to remitting the DIP Collections to the DIP Borrower Accounts. Any funds passing through these unencumbered lockbox accounts, collection/clearing accounts, and/or custodial accounts that constitute Collateral (as defined in the DIP Credit Agreement) or proceeds of Collateral shall at all times be subject to the liens securing the DIP Facilities and shall be held in trust for the benefit of the DIP lenders.

23. Funds on deposit in the DIP Borrower Accounts may be swept from time to time to the DIP Concentration Account in accordance with the DIP Credit Agreement. Each time funds in the DIP Borrower Accounts are swept to the DIP Concentration Account, ResCap shall become obligated (a) to the GMACM Borrower in the amount swept into the DIP Concentration Account from the GMACM Borrower Account and (b) to the RFC Borrower in the amount swept into the DIP Concentration Account from the RFC Borrower Account. Such intercompany indebtedness shall be payable upon demand by the applicable Borrower or, upon the occurrence of an Event of Default under the DIP Credit Agreement (such term as defined therein), by the Collateral Agent. In addition, collections on First Lien Collateral pledged under the DIP Facilities shall be remitted to the DIP Concentration Account from the Debtors' other operating accounts.

24. The DIP Concentration Account shall be a ResCap segregated account into which only funds swept from the DIP Borrower Accounts will be deposited and no other

funds of the Credit Parties (as defined in the DIP Credit Agreement) shall be commingled with such funds. The DIP Concentration Account shall not be subject to any Adverse Claim (as defined in the DIP Credit Agreement), except as specifically set forth in the DIP Credit Agreement.

25. As long as the conditions to withdrawal of funds from the DIP Concentration Account and the DIP Borrower Accounts, as set forth in the DIP Credit Agreement, are satisfied, and other than during a Dominion Period, ResCap and the Borrowers shall be permitted to withdraw funds from the DIP Concentration Account and the DIP Borrower Accounts, respectively, to fund certain additional servicer advances, certain loan repurchases, a share of the operating expenses and other expenditures specifically set forth in the DIP Credit Agreement, in each case, in accordance with the Approved DIP Budget.

26. During an Activation Period (as defined in the DIP Credit Agreement) or a Dominion Period, all funds in the DIP Borrower Accounts and the DIP Concentration Account shall be swept daily into a deposit account established by the RFC Borrower (the "DIP Collection Account"). Upon the occurrence of an Event of Default, the Administrative Agent may, or, at the request of the Requisite Lenders (as defined in the DIP Credit Agreement) shall, give notice to the Borrower Account Bank (as defined in the DIP Credit Agreement) and the Concentration Account Bank (as defined in the DIP Credit Agreement), commencing a Dominion Period, and shall further direct the Borrower Account Bank and the Concentration Account Bank to forward and sweep daily all amounts in the DIP Borrower Accounts and the DIP Concentration Account to the DIP Collection Account. During a Dominion Period, after written notice from the Collateral Agent, all funds in the DIP Collection Account shall be applied to outstanding DIP obligations in accordance with the DIP Credit Agreement.

27. The DIP Borrower Accounts, the DIP Concentration Account and the Collection Account shall each be subject to a Deposit Account Control Agreement (as defined in the DIP Credit Agreement) in favor of the Collateral Agent for the benefit of the Secured Parties under the DIP Facilities.

28. The Borrowers shall not establish any new bank accounts, deposit accounts, checking accounts, money market funds, certificates of deposit or other similar accounts or financial instruments accounts, other than the DIP Borrower Accounts and the DIP Collection Account, without the prior written consent of the Administrative Agent, and any new accounts shall be subject to a control agreement satisfactory to the Collateral Agent.

29. All financial institutions in which (a) the DIP Borrower Accounts, (b) the DIP Concentration Account, (c) the DIP Collection Account, or (d) any other deposit accounts, lockboxes, blocked accounts or other accounts of any of the Debtors holding the proceeds of any of the collateral securing the DIP Facilities are located are authorized and directed to comply with any request of the Collateral Agent to turn over to the Collateral Agent all funds therein. Moreover, the depositary banks are authorized to rely upon the directions of the Debtors and the Collateral Agent in accordance with this Order and the relevant Deposit Account Control Agreements (as defined in the DIP Credit Agreement). Under the Deposit Account Control Agreements (as defined in the DIP Credit Agreement), such financial institutions shall waive all rights to setoff or deduction of any kind, other than certain limited rights as agreed in section 4 of the Deposit Account Control Agreements.

Bank Accounts, Checks, and Business Forms

30. The requirements of the U.S. Trustee Guidelines that the Debtors close all existing bank accounts and open new debtor in possession accounts are hereby waived. Further, the requirements of the U.S. Trustee Guidelines that the Debtors establish specific bank accounts for tax payments are hereby waived.

31. The Bank Accounts are deemed debtor in possession accounts. The Debtors are authorized, but not directed, to use the Bank Accounts in the same manner and with the same account numbers, styles and document forms as those employed before the Petition Date (or, the case of any New Account now in existence, as are currently employed), including, without limitation: (a) to deposit funds in, and, to the extent the Debtors have good fund standing to their credit in such accounts, withdraw funds from, the Bank Accounts by all usual means, including checks, wire transfers, and other Debits, (b) to pay postpetition ordinary course bank fees in connection with the Bank Accounts, (c) to perform their obligations under the documents and agreements governing the Bank Accounts, (d) to treat the Bank Accounts for all purposes as accounts of the Debtors in their capacities as debtors in possession.

32. The Debtors are authorized to continue using all checks, correspondence, and business forms (including, but not limited to, letterhead, purchase orders and invoices) substantially in the forms existing immediately before the Petition Date, without reference to the Debtors' status as debtors in possession; provided, however, that the Debtors shall modify the check printing system so that checks will include a legend referring to the Debtors as "Debtor-in-Possession" or "DIP".

Investment and Deposit Requirements of 11 U.S.C. § 345

33. The Debtors are authorized to invest and deposit funds in accordance with their existing investment practices, and, to the extent that such practices are not consistent with the requirements of 11 U.S.C. § 345(b), such requirements are waived, for good cause shown, on an interim basis. To the extent the Debtors are not in compliance with Bankruptcy Code section 345(b) in a period of ninety (90) days from the date of entry of this Order, the Debtors shall seek additional relief from this Court or make such other arrangements as required by the U.S. Trustee; provided, however, if the Debtors are in compliance, then no further or other relief from the Court is necessary.

Intercompany Transactions and Intercompany Claims

34. The Debtors are authorized to continue to maintain their business relationships and to undertake transactions between each other and any Future Debtors (the "Intercompany Transactions") in the ordinary course and consistent with past practice. Pursuant to Bankruptcy Code sections 503(b)(1) and 364(b), all claims against any Debtor by another Debtor or by a Future Debtor and arising on or after the Petition Date in connection with the Intercompany Transactions shall be accorded administrative expense status and priority of the kind specified in sections 503(b) and 507(b) of the Bankruptcy Code.

Other Matters

35. Bankruptcy Rule 6003(b) has been satisfied.

36. The requirements of Bankruptcy Rule 6004(a) are waived.

37. The Debtors are hereby authorized to execute any additional or supplemental documents incident to the relief granted pursuant to this Order.

38. The Debtors, their officers, employees and agents, are authorized to take or refrain from taking such acts as are necessary and appropriate to implement and effectuate the relief granted herein.

39. Upon request of a lender, within 20 days after the end of a calendar month, the Debtors shall provide their pre- and post-petition lenders with a report, in a form reasonably satisfactory to the post-petition lenders, of the allocation among the various collateral pools of the estates' total expenses that were allocated among the various collateral pools during the prior calendar month, and such allocation of expenses shall be pro rata based on the Debtors' borrowing base projections (which shall be updated on a monthly basis).

40. Notwithstanding anything to the contrary in this Order, any action to be taken pursuant to the relief authorized in this Order is subject to the terms of any cash collateral order entered in these chapter 11 cases as well as any restrictions in the AFI DIP, DIP Credit Agreement or the order approving such agreement. To the extent there is any inconsistency between the terms of this order and the terms of any order relating to postpetition financing or cash collateral, the terms of the orders relating to postpetition financing or cash collateral shall govern. Nothing granted in this Order shall be deemed to constitute an assumption or rejection by the Debtors of any contracts or agreements, and the Debtors retain their rights to assume, reject or modify any contracts or agreements to the extent they are entitled to do so under existing contracts or agreements or applicable law.

41. As promptly as possible, but in no event later than five (5) business days after entry of this Order, the Debtors shall serve a copy of this Order on the Banks at their contact information listed on **Exhibit B** to the Motion, in addition to the parties who received notice of the Motion.

42. Notwithstanding Bankruptcy Rule 6004(h), to the extent applicable, this Order shall be effective and enforceable immediately upon entry hereof.

43. Notwithstanding anything herein to the contrary, this Order shall not modify or affect the terms and provisions of, nor the rights and obligations under, (a) the Board of Governors of the Federal Reserve System Consent Order, dated April 13, 2011, by and among AFI, Ally Bank, ResCap, GMAC Mortgage, LLC, the Board of Governors of the Federal Reserve System, and the Federal Deposit Insurance Corporation, (b) the consent judgment entered April 5, 2012 by the District Court for the District of Columbia, dated February 9, 2012, (c) the Order of Assessment of a Civil Money Penalty Issued Upon Consent Pursuant to the Federal Deposit Insurance Act, as amended, dated February 10, 2012, and (d) AFI and Ally Bank and their respective subsidiaries and affiliates (excluding ResCap and its subsidiaries).

44. The relief granted by this Order shall apply to any affiliated future debtor (a "Future Debtor") in these jointly-administered cases. An affiliated debtor shall be deemed to be a Future Debtor upon the Court's entry of an order authorizing the joint administration of such Future Debtor's Chapter 11 case with the Chapter 11 cases of the Debtors.

45. The final hearing to consider entry of an order granting the relief requested in the Motion on a permanent basis shall be held on _____ ___, 2012 at __;00 __.m., prevailing Eastern Time; and any objections to entry of such order shall be in writing, filed with the Court in accordance with General Order M-399, and served upon (i) the attorneys for the Debtors, Morrison & Foerster LLP, 1290 Avenue of the Americas, New York, New York 10104 (Attn: Larren M. Nashelsky, Esq.) and (ii) the Notice Parties, in each case so as to be received no later than 4:00 p.m., prevailing Eastern Time on _____, 2012.

46. This Order is effective only from the date of entry through this Court's disposition of the Motion on a final basis at or after the final hearing; *provided, however*, that the Court's ultimate disposition of the Motion on a final basis shall not impair or otherwise affect any action taken pursuant to this Order.

47. This Court shall retain jurisdiction with respect to all matters relating to the interpretation or implementation of this Order.

Dated: New York, New York
, 2012

UNITED STATES BANKRUPTCY JUDGE

EXHIBIT B

Privileged and Confidential

Exhibit B - Bank Accounts

Ref #	Account Number	Bank	Address	Contact	Corporate/Company Code	Account Type
1	1010016077	Ally Bank	440 S Church St # 1100 Charlotte, NC 28202	Tom Houghton 704-444-4825 tom.houghton@ally.com	GMAC Mortgage, LLC	Custodial
2	2112371642	Ally Bank	440 S Church St # 1100 Charlotte, NC 28202	Tom Houghton 704-444-4825 tom.houghton@ally.com	GMAC Mortgage, LLC	Custodial
3	2122027473	Ally Bank	440 S Church St # 1100 Charlotte, NC 28202	Tom Houghton 704-444-4825 tom.houghton@ally.com	GMAC Mortgage, LLC	Restricted Cash - Depository
4	2210015240	Ally Bank	440 S Church St # 1100 Charlotte, NC 28202	Tom Houghton 704-444-4825 tom.houghton@ally.com	GMAC Mortgage, LLC	Custodial
5	2210015612	Ally Bank	440 S Church St # 1100 Charlotte, NC 28202	Tom Houghton 704-444-4825 tom.houghton@ally.com	GMAC Mortgage, LLC	Custodial
6	2210015620	Ally Bank	440 S Church St # 1100 Charlotte, NC 28202	Tom Houghton 704-444-4825 tom.houghton@ally.com	GMAC Mortgage, LLC	Custodial
7	2210015638	Ally Bank	440 S Church St # 1100 Charlotte, NC 28202	Tom Houghton 704-444-4825 tom.houghton@ally.com	GMAC Mortgage, LLC	Custodial
8	2210015653	Ally Bank	440 S Church St # 1100 Charlotte, NC 28202	Tom Houghton 704-444-4825 tom.houghton@ally.com	GMAC Mortgage, LLC	Custodial
9	2210015687	Ally Bank	440 S Church St # 1100 Charlotte, NC 28202	Tom Houghton 704-444-4825 tom.houghton@ally.com	GMAC Mortgage, LLC	Custodial
10	2210015695	Ally Bank	440 S Church St # 1100 Charlotte, NC 28202	Tom Houghton 704-444-4825 tom.houghton@ally.com	GMAC Mortgage, LLC	Custodial
11	2210015703	Ally Bank	440 S Church St # 1100 Charlotte, NC 28202	Tom Houghton 704-444-4825 tom.houghton@ally.com	GMAC Mortgage, LLC	Custodial
12	2210015794	Ally Bank	440 S Church St # 1100 Charlotte, NC 28202	Tom Houghton 704-444-4825 tom.houghton@ally.com	GMAC Mortgage, LLC	Custodial
13	2210015844	Ally Bank	440 S Church St # 1100 Charlotte, NC 28202	Tom Houghton 704-444-4825 tom.houghton@ally.com	GMAC Mortgage, LLC	Custodial
14	2210015851	Ally Bank	440 S Church St # 1100 Charlotte, NC 28202	Tom Houghton 704-444-4825 tom.houghton@ally.com	GMAC Mortgage, LLC	Custodial
15	2210015950	Ally Bank	440 S Church St # 1100 Charlotte, NC 28202	Tom Houghton 704-444-4825 tom.houghton@ally.com	GMAC Mortgage, LLC	Custodial
16	2210016024	Ally Bank	440 S Church St # 1100 Charlotte, NC 28202	Tom Houghton 704-444-4825 tom.houghton@ally.com	GMAC Mortgage, LLC	Custodial
17	2210027112	Ally Bank	440 S Church St # 1100 Charlotte, NC 28202	Tom Houghton 704-444-4825 tom.houghton@ally.com	GMAC Mortgage, LLC	Custodial
18	2210072431	Ally Bank	440 S Church St # 1100 Charlotte, NC 28202	Tom Houghton 704-444-4825 tom.houghton@ally.com	GMAC Mortgage, LLC	Custodial
19	2210072464	Ally Bank	440 S Church St # 1100 Charlotte, NC 28202	Tom Houghton 704-444-4825 tom.houghton@ally.com	GMAC Mortgage, LLC	Custodial
20	2210088684	Ally Bank	440 S Church St # 1100 Charlotte, NC 28202	Tom Houghton 704-444-4825 tom.houghton@ally.com	GMAC Mortgage, LLC	Custodial
21	2210095549	Ally Bank	440 S Church St # 1100 Charlotte, NC 28202	Tom Houghton 704-444-4825 tom.houghton@ally.com	GMAC Mortgage, LLC	Custodial
22	2210095556	Ally Bank	440 S Church St # 1100 Charlotte, NC 28202	Tom Houghton 704-444-4825 tom.houghton@ally.com	GMAC Mortgage, LLC	Custodial
23	2210096323	Ally Bank	440 S Church St # 1100 Charlotte, NC 28202	Tom Houghton 704-444-4825 tom.houghton@ally.com	GMAC Mortgage, LLC	Restricted Cash - Depository
24	2210115628	Ally Bank	440 S Church St # 1100 Charlotte, NC 28202	Tom Houghton 704-444-4825 tom.houghton@ally.com	GMACR Mortgage Products, LLC	Operating - Other
25	2210120149	Ally Bank	440 S Church St # 1100 Charlotte, NC 28202	Tom Houghton 704-444-4825 tom.houghton@ally.com	GMAC Mortgage, LLC	Custodial
26	2210120164	Ally Bank	440 S Church St # 1100 Charlotte, NC 28202	Tom Houghton 704-444-4825 tom.houghton@ally.com	GMAC Mortgage, LLC	Custodial
27	2210126823	Ally Bank	440 S Church St # 1100 Charlotte, NC 28202	Tom Houghton 704-444-4825 tom.houghton@ally.com	GMAC Mortgage, LLC	Custodial
28	2210126831	Ally Bank	440 S Church St # 1100 Charlotte, NC 28202	Tom Houghton 704-444-4825 tom.houghton@ally.com	GMAC Mortgage, LLC	Custodial
29	2210126872	Ally Bank	440 S Church St # 1100 Charlotte, NC 28202	Tom Houghton 704-444-4825 tom.houghton@ally.com	GMAC Mortgage, LLC	Custodial
30	2210126898	Ally Bank	440 S Church St # 1100 Charlotte, NC 28202	Tom Houghton 704-444-4825 tom.houghton@ally.com	GMAC Mortgage, LLC	Custodial
31	2210126930	Ally Bank	440 S Church St # 1100 Charlotte, NC 28202	Tom Houghton 704-444-4825 tom.houghton@ally.com	GMAC Mortgage, LLC	Custodial
32	2210126989	Ally Bank	440 S Church St # 1100 Charlotte, NC 28202	Tom Houghton 704-444-4825 tom.houghton@ally.com	GMAC Mortgage, LLC	Custodial
33	2210127003	Ally Bank	440 S Church St # 1100 Charlotte, NC 28202	Tom Houghton 704-444-4825 tom.houghton@ally.com	GMAC Mortgage, LLC	Custodial
34	2210127011	Ally Bank	440 S Church St # 1100 Charlotte, NC 28202	Tom Houghton 704-444-4825 tom.houghton@ally.com	GMAC Mortgage, LLC	Custodial
35	2210127029	Ally Bank	440 S Church St # 1100 Charlotte, NC 28202	Tom Houghton 704-444-4825 tom.houghton@ally.com	GMAC Mortgage, LLC	Custodial
36	2210127037	Ally Bank	440 S Church St # 1100 Charlotte, NC 28202	Tom Houghton 704-444-4825 tom.houghton@ally.com	GMAC Mortgage, LLC	Custodial
37	2210127045	Ally Bank	440 S Church St # 1100 Charlotte, NC 28202	Tom Houghton 704-444-4825 tom.houghton@ally.com	GMAC Mortgage, LLC	Custodial
38	2210127052	Ally Bank	440 S Church St # 1100 Charlotte, NC 28202	Tom Houghton 704-444-4825 tom.houghton@ally.com	GMAC Mortgage, LLC	Custodial
39	2210127060	Ally Bank	440 S Church St # 1100 Charlotte, NC 28202	Tom Houghton 704-444-4825 tom.houghton@ally.com	GMAC Mortgage, LLC	Custodial
40	2210127086	Ally Bank	440 S Church St # 1100 Charlotte, NC 28202	Tom Houghton 704-444-4825 tom.houghton@ally.com	GMAC Mortgage, LLC	Custodial
41	2210127094	Ally Bank	440 S Church St # 1100 Charlotte, NC 28202	Tom Houghton 704-444-4825 tom.houghton@ally.com	GMAC Mortgage, LLC	Custodial
42	2210127102	Ally Bank	440 S Church St # 1100 Charlotte, NC 28202	Tom Houghton 704-444-4825 tom.houghton@ally.com	GMAC Mortgage, LLC	Custodial
43	2210127110	Ally Bank	440 S Church St # 1100 Charlotte, NC 28202	Tom Houghton 704-444-4825 tom.houghton@ally.com	GMAC Mortgage, LLC	Custodial

Privileged and Confidential

Exhibit B - Bank Accounts

Ref #	Account Number	Bank	Address	Contact	Corporate/Company Code	Account Type
44	2210127268	Ally Bank	440 S Church St # 1100 Charlotte, NC 28202	Tom Houghton 704-444-4825 tom.houghton@ally.com	GMAC Mortgage, LLC	Custodial
45	2210127276	Ally Bank	440 S Church St # 1100 Charlotte, NC 28202	Tom Houghton 704-444-4825 tom.houghton@ally.com	GMAC Mortgage, LLC	Custodial
46	2210127383	Ally Bank	440 S Church St # 1100 Charlotte, NC 28202	Tom Houghton 704-444-4825 tom.houghton@ally.com	GMAC Mortgage, LLC	Custodial
47	2210127458	Ally Bank	440 S Church St # 1100 Charlotte, NC 28202	Tom Houghton 704-444-4825 tom.houghton@ally.com	GMAC Mortgage, LLC	Custodial
48	2210127482	Ally Bank	440 S Church St # 1100 Charlotte, NC 28202	Tom Houghton 704-444-4825 tom.houghton@ally.com	GMAC Mortgage, LLC	Custodial
49	2210127490	Ally Bank	440 S Church St # 1100 Charlotte, NC 28202	Tom Houghton 704-444-4825 tom.houghton@ally.com	GMAC Mortgage, LLC	Custodial
50	2210127557	Ally Bank	440 S Church St # 1100 Charlotte, NC 28202	Tom Houghton 704-444-4825 tom.houghton@ally.com	GMAC Mortgage, LLC	Custodial
51	2210127565	Ally Bank	440 S Church St # 1100 Charlotte, NC 28202	Tom Houghton 704-444-4825 tom.houghton@ally.com	GMAC Mortgage, LLC	Custodial
52	2210127573	Ally Bank	440 S Church St # 1100 Charlotte, NC 28202	Tom Houghton 704-444-4825 tom.houghton@ally.com	GMAC Mortgage, LLC	Custodial
53	2210127649	Ally Bank	440 S Church St # 1100 Charlotte, NC 28202	Tom Houghton 704-444-4825 tom.houghton@ally.com	GMAC Mortgage, LLC	Custodial
54	2210127664	Ally Bank	440 S Church St # 1100 Charlotte, NC 28202	Tom Houghton 704-444-4825 tom.houghton@ally.com	GMAC Mortgage, LLC	Custodial
55	2210127672	Ally Bank	440 S Church St # 1100 Charlotte, NC 28202	Tom Houghton 704-444-4825 tom.houghton@ally.com	GMAC Mortgage, LLC	Custodial
56	2210127680	Ally Bank	440 S Church St # 1100 Charlotte, NC 28202	Tom Houghton 704-444-4825 tom.houghton@ally.com	GMAC Mortgage, LLC	Custodial
57	2210127714	Ally Bank	440 S Church St # 1100 Charlotte, NC 28202	Tom Houghton 704-444-4825 tom.houghton@ally.com	GMAC Mortgage, LLC	Custodial
58	2210127730	Ally Bank	440 S Church St # 1100 Charlotte, NC 28202	Tom Houghton 704-444-4825 tom.houghton@ally.com	GMAC Mortgage, LLC	Custodial
59	2210132896	Ally Bank	440 S Church St # 1100 Charlotte, NC 28202	Tom Houghton 704-444-4825 tom.houghton@ally.com	GMAC Mortgage, LLC	Custodial
60	2210132904	Ally Bank	440 S Church St # 1100 Charlotte, NC 28202	Tom Houghton 704-444-4825 tom.houghton@ally.com	GMAC Mortgage, LLC	Custodial
61	2210132979	Ally Bank	440 S Church St # 1100 Charlotte, NC 28202	Tom Houghton 704-444-4825 tom.houghton@ally.com	GMAC Mortgage, LLC	Custodial
62	2210132987	Ally Bank	440 S Church St # 1100 Charlotte, NC 28202	Tom Houghton 704-444-4825 tom.houghton@ally.com	GMAC Mortgage, LLC	Custodial
63	2210132995	Ally Bank	440 S Church St # 1100 Charlotte, NC 28202	Tom Houghton 704-444-4825 tom.houghton@ally.com	GMAC Mortgage, LLC	Custodial
64	2210133001	Ally Bank	440 S Church St # 1100 Charlotte, NC 28202	Tom Houghton 704-444-4825 tom.houghton@ally.com	GMAC Mortgage, LLC	Custodial
65	2210133019	Ally Bank	440 S Church St # 1100 Charlotte, NC 28202	Tom Houghton 704-444-4825 tom.houghton@ally.com	GMAC Mortgage, LLC	Custodial
66	2210133027	Ally Bank	440 S Church St # 1100 Charlotte, NC 28202	Tom Houghton 704-444-4825 tom.houghton@ally.com	GMAC Mortgage, LLC	Custodial
67	2210133035	Ally Bank	440 S Church St # 1100 Charlotte, NC 28202	Tom Houghton 704-444-4825 tom.houghton@ally.com	GMAC Mortgage, LLC	Custodial
68	2210133043	Ally Bank	440 S Church St # 1100 Charlotte, NC 28202	Tom Houghton 704-444-4825 tom.houghton@ally.com	GMAC Mortgage, LLC	Custodial
69	2210133084	Ally Bank	440 S Church St # 1100 Charlotte, NC 28202	Tom Houghton 704-444-4825 tom.houghton@ally.com	GMAC Mortgage, LLC	Custodial
70	2210133134	Ally Bank	440 S Church St # 1100 Charlotte, NC 28202	Tom Houghton 704-444-4825 tom.houghton@ally.com	GMAC Mortgage, LLC	Custodial
71	2210133159	Ally Bank	440 S Church St # 1100 Charlotte, NC 28202	Tom Houghton 704-444-4825 tom.houghton@ally.com	GMAC Mortgage, LLC	Custodial
72	2210133167	Ally Bank	440 S Church St # 1100 Charlotte, NC 28202	Tom Houghton 704-444-4825 tom.houghton@ally.com	GMAC Mortgage, LLC	Custodial
73	2210133175	Ally Bank	440 S Church St # 1100 Charlotte, NC 28202	Tom Houghton 704-444-4825 tom.houghton@ally.com	GMAC Mortgage, LLC	Custodial
74	2210133209	Ally Bank	440 S Church St # 1100 Charlotte, NC 28202	Tom Houghton 704-444-4825 tom.houghton@ally.com	GMAC Mortgage, LLC	Custodial
75	2210133225	Ally Bank	440 S Church St # 1100 Charlotte, NC 28202	Tom Houghton 704-444-4825 tom.houghton@ally.com	GMAC Mortgage, LLC	Custodial
76	2210133233	Ally Bank	440 S Church St # 1100 Charlotte, NC 28202	Tom Houghton 704-444-4825 tom.houghton@ally.com	GMAC Mortgage, LLC	Custodial
77	2210133258	Ally Bank	440 S Church St # 1100 Charlotte, NC 28202	Tom Houghton 704-444-4825 tom.houghton@ally.com	GMAC Mortgage, LLC	Custodial
78	2210133274	Ally Bank	440 S Church St # 1100 Charlotte, NC 28202	Tom Houghton 704-444-4825 tom.houghton@ally.com	GMAC Mortgage, LLC	Custodial
79	2210133282	Ally Bank	440 S Church St # 1100 Charlotte, NC 28202	Tom Houghton 704-444-4825 tom.houghton@ally.com	GMAC Mortgage, LLC	Custodial
80	2210133332	Ally Bank	440 S Church St # 1100 Charlotte, NC 28202	Tom Houghton 704-444-4825 tom.houghton@ally.com	GMAC Mortgage, LLC	Custodial
81	2210133423	Ally Bank	440 S Church St # 1100 Charlotte, NC 28202	Tom Houghton 704-444-4825 tom.houghton@ally.com	GMAC Mortgage, LLC	Custodial
82	2210133431	Ally Bank	440 S Church St # 1100 Charlotte, NC 28202	Tom Houghton 704-444-4825 tom.houghton@ally.com	GMAC Mortgage, LLC	Custodial
83	2210143935	Ally Bank	440 S Church St # 1100 Charlotte, NC 28202	Tom Houghton 704-444-4825 tom.houghton@ally.com	GMAC Mortgage, LLC	Custodial
84	2210143968	Ally Bank	440 S Church St # 1100 Charlotte, NC 28202	Tom Houghton 704-444-4825 tom.houghton@ally.com	GMAC Mortgage, LLC	Custodial
85	2210144016	Ally Bank	440 S Church St # 1100 Charlotte, NC 28202	Tom Houghton 704-444-4825 tom.houghton@ally.com	GMAC Mortgage, LLC	Custodial
86	2210144073	Ally Bank	440 S Church St # 1100 Charlotte, NC 28202	Tom Houghton 704-444-4825 tom.houghton@ally.com	GMAC Mortgage, LLC	Custodial

Privileged and Confidential

Exhibit B - Bank Accounts

Ref #	Account Number	Bank	Address	Contact	Corporate/Company Code	Account Type
87	2210144081	Ally Bank	440 S Church St # 1100 Charlotte, NC 28202	Tom Houghton 704-444-4825 tom.houghton@ally.com	GMAC Mortgage, LLC	Custodial
88	2210144099	Ally Bank	440 S Church St # 1100 Charlotte, NC 28202	Tom Houghton 704-444-4825 tom.houghton@ally.com	GMAC Mortgage, LLC	Custodial
89	2210144107	Ally Bank	440 S Church St # 1100 Charlotte, NC 28202	Tom Houghton 704-444-4825 tom.houghton@ally.com	GMAC Mortgage, LLC	Custodial
90	2210144156	Ally Bank	440 S Church St # 1100 Charlotte, NC 28202	Tom Houghton 704-444-4825 tom.houghton@ally.com	GMAC Mortgage, LLC	Custodial
91	2210144164	Ally Bank	440 S Church St # 1100 Charlotte, NC 28202	Tom Houghton 704-444-4825 tom.houghton@ally.com	GMAC Mortgage, LLC	Custodial
92	2210144172	Ally Bank	440 S Church St # 1100 Charlotte, NC 28202	Tom Houghton 704-444-4825 tom.houghton@ally.com	GMAC Mortgage, LLC	Custodial
93	2210144453	Ally Bank	440 S Church St # 1100 Charlotte, NC 28202	Tom Houghton 704-444-4825 tom.houghton@ally.com	GMAC Mortgage, LLC	Custodial
94	2210144479	Ally Bank	440 S Church St # 1100 Charlotte, NC 28202	Tom Houghton 704-444-4825 tom.houghton@ally.com	GMAC Mortgage, LLC	Custodial
95	2210144537	Ally Bank	440 S Church St # 1100 Charlotte, NC 28202	Tom Houghton 704-444-4825 tom.houghton@ally.com	GMAC Mortgage, LLC	Custodial
96	2210144545	Ally Bank	440 S Church St # 1100 Charlotte, NC 28202	Tom Houghton 704-444-4825 tom.houghton@ally.com	GMAC Mortgage, LLC	Custodial
97	2210144586	Ally Bank	440 S Church St # 1100 Charlotte, NC 28202	Tom Houghton 704-444-4825 tom.houghton@ally.com	GMAC Mortgage, LLC	Custodial
98	2210144602	Ally Bank	440 S Church St # 1100 Charlotte, NC 28202	Tom Houghton 704-444-4825 tom.houghton@ally.com	GMAC Mortgage, LLC	Custodial
99	2210144610	Ally Bank	440 S Church St # 1100 Charlotte, NC 28202	Tom Houghton 704-444-4825 tom.houghton@ally.com	GMAC Mortgage, LLC	Custodial
100	2210144636	Ally Bank	440 S Church St # 1100 Charlotte, NC 28202	Tom Houghton 704-444-4825 tom.houghton@ally.com	GMAC Mortgage, LLC	Custodial
101	2210144644	Ally Bank	440 S Church St # 1100 Charlotte, NC 28202	Tom Houghton 704-444-4825 tom.houghton@ally.com	GMAC Mortgage, LLC	Custodial
102	2210144669	Ally Bank	440 S Church St # 1100 Charlotte, NC 28202	Tom Houghton 704-444-4825 tom.houghton@ally.com	GMAC Mortgage, LLC	Custodial
103	2210144677	Ally Bank	440 S Church St # 1100 Charlotte, NC 28202	Tom Houghton 704-444-4825 tom.houghton@ally.com	GMAC Mortgage, LLC	Custodial
104	2210144685	Ally Bank	440 S Church St # 1100 Charlotte, NC 28202	Tom Houghton 704-444-4825 tom.houghton@ally.com	GMAC Mortgage, LLC	Custodial
105	2210144792	Ally Bank	440 S Church St # 1100 Charlotte, NC 28202	Tom Houghton 704-444-4825 tom.houghton@ally.com	GMAC Mortgage, LLC	Custodial
106	2210156515	Ally Bank	440 S Church St # 1100 Charlotte, NC 28202	Tom Houghton 704-444-4825 tom.houghton@ally.com	GMAC Mortgage, LLC	Custodial
107	2210156531	Ally Bank	440 S Church St # 1100 Charlotte, NC 28202	Tom Houghton 704-444-4825 tom.houghton@ally.com	GMAC Mortgage, LLC	Custodial
108	2210156549	Ally Bank	440 S Church St # 1100 Charlotte, NC 28202	Tom Houghton 704-444-4825 tom.houghton@ally.com	GMAC Mortgage, LLC	Custodial
109	2210156556	Ally Bank	440 S Church St # 1100 Charlotte, NC 28202	Tom Houghton 704-444-4825 tom.houghton@ally.com	GMAC Mortgage, LLC	Custodial
110	2210183386	Ally Bank	440 S Church St # 1100 Charlotte, NC 28202	Tom Houghton 704-444-4825 tom.houghton@ally.com	GMAC Mortgage, LLC	Custodial
111	2210183600	Ally Bank	440 S Church St # 1100 Charlotte, NC 28202	Tom Houghton 704-444-4825 tom.houghton@ally.com	GMAC Mortgage, LLC	Custodial
112	2210184095	Ally Bank	440 S Church St # 1100 Charlotte, NC 28202	Tom Houghton 704-444-4825 tom.houghton@ally.com	GMAC Mortgage, LLC	Custodial
113	2210184178	Ally Bank	440 S Church St # 1100 Charlotte, NC 28202	Tom Houghton 704-444-4825 tom.houghton@ally.com	GMAC Mortgage, LLC	Custodial
114	2210217580	Ally Bank	440 S Church St # 1100 Charlotte, NC 28202	Tom Houghton 704-444-4825 tom.houghton@ally.com	GMAC Mortgage, LLC	Custodial
115	2210229122	Ally Bank	440 S Church St # 1100 Charlotte, NC 28202	Tom Houghton 704-444-4825 tom.houghton@ally.com	GMAC Mortgage, LLC	Custodial
116	2210229205	Ally Bank	440 S Church St # 1100 Charlotte, NC 28202	Tom Houghton 704-444-4825 tom.houghton@ally.com	GMAC Mortgage, LLC	Custodial
117	2210229213	Ally Bank	440 S Church St # 1100 Charlotte, NC 28202	Tom Houghton 704-444-4825 tom.houghton@ally.com	GMAC Mortgage, LLC	Custodial
118	2210229221	Ally Bank	440 S Church St # 1100 Charlotte, NC 28202	Tom Houghton 704-444-4825 tom.houghton@ally.com	GMAC Mortgage, LLC	Custodial
119	2210229247	Ally Bank	440 S Church St # 1100 Charlotte, NC 28202	Tom Houghton 704-444-4825 tom.houghton@ally.com	GMAC Mortgage, LLC	Custodial
120	2210252785	Ally Bank	440 S Church St # 1100 Charlotte, NC 28202	Tom Houghton 704-444-4825 tom.houghton@ally.com	GMAC Mortgage, LLC	Custodial
121	2210252843	Ally Bank	440 S Church St # 1100 Charlotte, NC 28202	Tom Houghton 704-444-4825 tom.houghton@ally.com	GMAC Mortgage, LLC	Custodial
122	2210252850	Ally Bank	440 S Church St # 1100 Charlotte, NC 28202	Tom Houghton 704-444-4825 tom.houghton@ally.com	GMAC Mortgage, LLC	Custodial
123	2210252868	Ally Bank	440 S Church St # 1100 Charlotte, NC 28202	Tom Houghton 704-444-4825 tom.houghton@ally.com	GMAC Mortgage, LLC	Custodial
124	2210280315	Ally Bank	440 S Church St # 1100 Charlotte, NC 28202	Tom Houghton 704-444-4825 tom.houghton@ally.com	GMAC Mortgage, LLC	Custodial
125	2210280562	Ally Bank	440 S Church St # 1100 Charlotte, NC 28202	Tom Houghton 704-444-4825 tom.houghton@ally.com	GMAC Mortgage, LLC	Custodial
126	2210280570	Ally Bank	440 S Church St # 1100 Charlotte, NC 28202	Tom Houghton 704-444-4825 tom.houghton@ally.com	GMAC Mortgage, LLC	Custodial
127	2210316077	Ally Bank	440 S Church St # 1100 Charlotte, NC 28202	Tom Houghton 704-444-4825 tom.houghton@ally.com	GMAC Mortgage, LLC	Custodial
128	2210367179	Ally Bank	440 S Church St # 1100 Charlotte, NC 28202	Tom Houghton 704-444-4825 tom.houghton@ally.com	GMAC Mortgage, LLC	Custodial
129	2210402547	Ally Bank	440 S Church St # 1100 Charlotte, NC 28202	Tom Houghton 704-444-4825 tom.houghton@ally.com	GMAC Mortgage, LLC	Custodial

Privileged and Confidential

Exhibit B - Bank Accounts

Ref #	Account Number	Bank	Address	Contact	Corporate/Company Code	Account Type
130	2211000027	Ally Bank	440 S Church St # 1100 Charlotte, NC 28202	Tom Houghton 704-444-4825 tom.houghton@ally.com	GMAC Mortgage, LLC	Custodial
131	2211000043	Ally Bank	440 S Church St # 1100 Charlotte, NC 28202	Tom Houghton 704-444-4825 tom.houghton@ally.com	GMAC Mortgage, LLC	Custodial
132	2211000050	Ally Bank	440 S Church St # 1100 Charlotte, NC 28202	Tom Houghton 704-444-4825 tom.houghton@ally.com	GMAC Mortgage, LLC	Custodial
133	2211000068	Ally Bank	440 S Church St # 1100 Charlotte, NC 28202	Tom Houghton 704-444-4825 tom.houghton@ally.com	GMAC Mortgage, LLC	Custodial
134	2211000118	Ally Bank	440 S Church St # 1100 Charlotte, NC 28202	Tom Houghton 704-444-4825 tom.houghton@ally.com	GMAC Mortgage, LLC	Custodial
135	2211203803	Ally Bank	440 S Church St # 1100 Charlotte, NC 28202	Tom Houghton 704-444-4825 tom.houghton@ally.com	GMAC Mortgage USA Corporation	Operating - Other
136	2211309394	Ally Bank	440 S Church St # 1100 Charlotte, NC 28202	Tom Houghton 704-444-4825 tom.houghton@ally.com	GMAC Mortgage, LLC	Custodial
137	2211556184	Ally Bank	440 S Church St # 1100 Charlotte, NC 28202	Tom Houghton 704-444-4825 tom.houghton@ally.com	GMAC Mortgage, LLC	Custodial
138	2211740572	Ally Bank	440 S Church St # 1100 Charlotte, NC 28202	Tom Houghton 704-444-4825 tom.houghton@ally.com	GMAC Mortgage, LLC	Custodial
139	2211815192	Ally Bank	440 S Church St # 1100 Charlotte, NC 28202	Tom Houghton 704-444-4825 tom.houghton@ally.com	GMAC Mortgage, LLC	Custodial
140	2211815200	Ally Bank	440 S Church St # 1100 Charlotte, NC 28202	Tom Houghton 704-444-4825 tom.houghton@ally.com	GMAC Mortgage, LLC	Custodial
141	2211831660	Ally Bank	440 S Church St # 1100 Charlotte, NC 28202	Tom Houghton 704-444-4825 tom.houghton@ally.com	GMAC Mortgage, LLC	Custodial
142	2211852997	Ally Bank	440 S Church St # 1100 Charlotte, NC 28202	Tom Houghton 704-444-4825 tom.houghton@ally.com	GMAC Mortgage, LLC	Custodial
143	2211853193	Ally Bank	440 S Church St # 1100 Charlotte, NC 28202	Tom Houghton 704-444-4825 tom.houghton@ally.com	GMAC Mortgage, LLC	Custodial
144	2211853284	Ally Bank	440 S Church St # 1100 Charlotte, NC 28202	Tom Houghton 704-444-4825 tom.houghton@ally.com	GMAC Mortgage, LLC	Custodial
145	2211853920	Ally Bank	440 S Church St # 1100 Charlotte, NC 28202	Tom Houghton 704-444-4825 tom.houghton@ally.com	GMAC Mortgage, LLC	Custodial
146	2211961665	Ally Bank	440 S Church St # 1100 Charlotte, NC 28202	Tom Houghton 704-444-4825 tom.houghton@ally.com	GMAC Mortgage, LLC	Custodial
147	2211961798	Ally Bank	440 S Church St # 1100 Charlotte, NC 28202	Tom Houghton 704-444-4825 tom.houghton@ally.com	GMAC Mortgage, LLC	Custodial
148	2212371500	Ally Bank	440 S Church St # 1100 Charlotte, NC 28202	Tom Houghton 704-444-4825 tom.houghton@ally.com	GMACR Mortgage Products, LLC	Non-Operating - General
149	2212371732	Ally Bank	440 S Church St # 1100 Charlotte, NC 28202	Tom Houghton 704-444-4825 tom.houghton@ally.com	GMAC Mortgage, LLC	Custodial
150	2212409334	Ally Bank	440 S Church St # 1100 Charlotte, NC 28202	Tom Houghton 704-444-4825 tom.houghton@ally.com	GMAC Mortgage, LLC	Custodial
151	2212409342	Ally Bank	440 S Church St # 1100 Charlotte, NC 28202	Tom Houghton 704-444-4825 tom.houghton@ally.com	GMAC Mortgage, LLC	Custodial
152	2212409367	Ally Bank	440 S Church St # 1100 Charlotte, NC 28202	Tom Houghton 704-444-4825 tom.houghton@ally.com	GMAC Mortgage, LLC	Custodial
153	2212409375	Ally Bank	440 S Church St # 1100 Charlotte, NC 28202	Tom Houghton 704-444-4825 tom.houghton@ally.com	GMAC Mortgage, LLC	Custodial
154	2212409383	Ally Bank	440 S Church St # 1100 Charlotte, NC 28202	Tom Houghton 704-444-4825 tom.houghton@ally.com	GMAC Mortgage, LLC	Custodial
155	2212409656	Ally Bank	440 S Church St # 1100 Charlotte, NC 28202	Tom Houghton 704-444-4825 tom.houghton@ally.com	GMAC Mortgage, LLC	Custodial
156	2212409664	Ally Bank	440 S Church St # 1100 Charlotte, NC 28202	Tom Houghton 704-444-4825 tom.houghton@ally.com	GMAC Mortgage, LLC	Custodial
157	2212409771	Ally Bank	440 S Church St # 1100 Charlotte, NC 28202	Tom Houghton 704-444-4825 tom.houghton@ally.com	GMAC Mortgage, LLC	Custodial
158	2212409987	Ally Bank	440 S Church St # 1100 Charlotte, NC 28202	Tom Houghton 704-444-4825 tom.houghton@ally.com	GMAC Mortgage, LLC	Custodial
159	2212410142	Ally Bank	440 S Church St # 1100 Charlotte, NC 28202	Tom Houghton 704-444-4825 tom.houghton@ally.com	GMAC Mortgage, LLC	Custodial
160	2212410209	Ally Bank	440 S Church St # 1100 Charlotte, NC 28202	Tom Houghton 704-444-4825 tom.houghton@ally.com	GMAC Mortgage, LLC	Custodial
161	2216768222	Ally Bank	440 S Church St # 1100 Charlotte, NC 28202	Tom Houghton 704-444-4825 tom.houghton@ally.com	GMAC Mortgage, LLC	Custodial
162	2216768578	Ally Bank	440 S Church St # 1100 Charlotte, NC 28202	Tom Houghton 704-444-4825 tom.houghton@ally.com	GMAC Mortgage, LLC	Custodial
163	2220352849	Ally Bank	440 S Church St # 1100 Charlotte, NC 28202	Tom Houghton 704-444-4825 tom.houghton@ally.com	GMAC Mortgage, LLC	Custodial
164	2220410894	Ally Bank	440 S Church St # 1100 Charlotte, NC 28202	Tom Houghton 704-444-4825 tom.houghton@ally.com	GMAC Mortgage, LLC	Custodial
165	2220628420	Ally Bank	440 S Church St # 1100 Charlotte, NC 28202	Tom Houghton 704-444-4825 tom.houghton@ally.com	GMAC Mortgage, LLC	Custodial
166	2221679547	Ally Bank	440 S Church St # 1100 Charlotte, NC 28202	Tom Houghton 704-444-4825 tom.houghton@ally.com	GMAC Mortgage, LLC	Custodial
167	2221794007	Ally Bank	440 S Church St # 1100 Charlotte, NC 28202	Tom Houghton 704-444-4825 tom.houghton@ally.com	GMAC Mortgage, LLC	Custodial
168	2310027103	Ally Bank	440 S Church St # 1100 Charlotte, NC 28202	Tom Houghton 704-444-4825 tom.houghton@ally.com	GMAC Mortgage, LLC	Custodial
169	4725518668	Ally Bank	440 S Church St # 1100 Charlotte, NC 28202	Tom Houghton 704-444-4825 tom.houghton@ally.com	GMAC Mortgage, LLC	Custodial
170	2226951404	Ally Bank	440 S Church St # 1100 Charlotte, NC 28202	Tom Houghton 704-444-4825 tom.houghton@ally.com	GMAC Mortgage, LLC	Custodial
171	990126021	Bank of America, N.A.	333 South Hope Street Los Angeles, CA 90071	Marilyn Thomas 213-621-4944 marilyn.thomas@baml.com	GMAC Residential Holding Company, LLC	Operating - Concentration
172	1233321368	Bank of America, N.A.	333 South Hope Street Los Angeles, CA 90071	Marilyn Thomas 213-621-4944 marilyn.thomas@baml.com	Executive Trustee Services LLC	Custodial

Privileged and Confidential

Exhibit B - Bank Accounts

Ref #	Account Number	Bank	Address	Contact	Corporate/Company Code	Account Type
173	1233321585	Bank of America, N.A.	333 South Hope Street Los Angeles, CA 90071	Marilyn Thomas 213-621-4944 marilyn.thomas@baml.com	Executive Trustee Services LLC	Custodial
174	1233321702	Bank of America, N.A.	333 South Hope Street Los Angeles, CA 90071	Marilyn Thomas 213-621-4944 marilyn.thomas@baml.com	Executive Trustee Services LLC	Custodial
175	1233321863	Bank of America, N.A.	333 South Hope Street Los Angeles, CA 90071	Marilyn Thomas 213-621-4944 marilyn.thomas@baml.com	Executive Trustee Services LLC	Custodial
176	1233321981	Bank of America, N.A.	333 South Hope Street Los Angeles, CA 90071	Marilyn Thomas 213-621-4944 marilyn.thomas@baml.com	Executive Trustee Services LLC	Custodial
177	1233322131	Bank of America, N.A.	333 South Hope Street Los Angeles, CA 90071	Marilyn Thomas 213-621-4944 marilyn.thomas@baml.com	Executive Trustee Services LLC	Custodial
178	1233322518	Bank of America, N.A.	333 South Hope Street Los Angeles, CA 90071	Marilyn Thomas 213-621-4944 marilyn.thomas@baml.com	Executive Trustee Services LLC	Custodial
179	1233852041	Bank of America, N.A.	333 South Hope Street Los Angeles, CA 90071	Marilyn Thomas 213-621-4944 marilyn.thomas@baml.com	GMAC Mortgage, LLC	Custodial
180	1233904474	Bank of America, N.A.	333 South Hope Street Los Angeles, CA 90071	Marilyn Thomas 213-621-4944 marilyn.thomas@baml.com	Home Connects Lending Services, LLC	Restricted Cash - Other
181	1235020788	Bank of America, N.A.	333 South Hope Street Los Angeles, CA 90071	Marilyn Thomas 213-621-4944 marilyn.thomas@baml.com	GMAC Mortgage, LLC	Custodial
182	1235199125	Bank of America, N.A.	333 South Hope Street Los Angeles, CA 90071	Marilyn Thomas 213-621-4944 marilyn.thomas@baml.com	GMAC Mortgage, LLC	Non-Operating - Disbursement
183	1235231191	Bank of America, N.A.	333 South Hope Street Los Angeles, CA 90071	Marilyn Thomas 213-621-4944 marilyn.thomas@baml.com	GMAC Mortgage, LLC	Custodial
184	1235339408	Bank of America, N.A.	333 South Hope Street Los Angeles, CA 90071	Marilyn Thomas 213-621-4944 marilyn.thomas@baml.com	Residential Funding Company, LLC	Custodial
185	1235339422	Bank of America, N.A.	333 South Hope Street Los Angeles, CA 90071	Marilyn Thomas 213-621-4944 marilyn.thomas@baml.com	Residential Funding Company, LLC	Custodial
186	1235339427	Bank of America, N.A.	333 South Hope Street Los Angeles, CA 90071	Marilyn Thomas 213-621-4944 marilyn.thomas@baml.com	Residential Funding Company, LLC	Custodial
187	1235339441	Bank of America, N.A.	333 South Hope Street Los Angeles, CA 90071	Marilyn Thomas 213-621-4944 marilyn.thomas@baml.com	Residential Funding Company, LLC	Custodial
188	1235339446	Bank of America, N.A.	333 South Hope Street Los Angeles, CA 90071	Marilyn Thomas 213-621-4944 marilyn.thomas@baml.com	Residential Funding Company, LLC	Custodial
189	1235339460	Bank of America, N.A.	333 South Hope Street Los Angeles, CA 90071	Marilyn Thomas 213-621-4944 marilyn.thomas@baml.com	Residential Funding Company, LLC	Custodial
190	1235339465	Bank of America, N.A.	333 South Hope Street Los Angeles, CA 90071	Marilyn Thomas 213-621-4944 marilyn.thomas@baml.com	Residential Funding Company, LLC	Custodial
191	1235339484	Bank of America, N.A.	333 South Hope Street Los Angeles, CA 90071	Marilyn Thomas 213-621-4944 marilyn.thomas@baml.com	Residential Funding Company, LLC	Custodial
192	1235339489	Bank of America, N.A.	333 South Hope Street Los Angeles, CA 90071	Marilyn Thomas 213-621-4944 marilyn.thomas@baml.com	Residential Funding Company, LLC	Custodial
193	1235339502	Bank of America, N.A.	333 South Hope Street Los Angeles, CA 90071	Marilyn Thomas 213-621-4944 marilyn.thomas@baml.com	Residential Funding Company, LLC	Custodial
194	1235339507	Bank of America, N.A.	333 South Hope Street Los Angeles, CA 90071	Marilyn Thomas 213-621-4944 marilyn.thomas@baml.com	Residential Funding Company, LLC	Custodial
195	1235339521	Bank of America, N.A.	333 South Hope Street Los Angeles, CA 90071	Marilyn Thomas 213-621-4944 marilyn.thomas@baml.com	Residential Funding Company, LLC	Custodial
196	1235339526	Bank of America, N.A.	333 South Hope Street Los Angeles, CA 90071	Marilyn Thomas 213-621-4944 marilyn.thomas@baml.com	Residential Funding Company, LLC	Custodial
197	1235339540	Bank of America, N.A.	333 South Hope Street Los Angeles, CA 90071	Marilyn Thomas 213-621-4944 marilyn.thomas@baml.com	Residential Funding Company, LLC	Custodial
198	1235339606	Bank of America, N.A.	333 South Hope Street Los Angeles, CA 90071	Marilyn Thomas 213-621-4944 marilyn.thomas@baml.com	Residential Funding Company, LLC	Custodial
199	1235339620	Bank of America, N.A.	333 South Hope Street Los Angeles, CA 90071	Marilyn Thomas 213-621-4944 marilyn.thomas@baml.com	Residential Funding Company, LLC	Custodial
200	1235339625	Bank of America, N.A.	333 South Hope Street Los Angeles, CA 90071	Marilyn Thomas 213-621-4944 marilyn.thomas@baml.com	Residential Funding Company, LLC	Custodial
201	1235339644	Bank of America, N.A.	333 South Hope Street Los Angeles, CA 90071	Marilyn Thomas 213-621-4944 marilyn.thomas@baml.com	Residential Funding Company, LLC	Custodial
202	1235339705	Bank of America, N.A.	333 South Hope Street Los Angeles, CA 90071	Marilyn Thomas 213-621-4944 marilyn.thomas@baml.com	Residential Funding Company, LLC	Custodial
203	1235339724	Bank of America, N.A.	333 South Hope Street Los Angeles, CA 90071	Marilyn Thomas 213-621-4944 marilyn.thomas@baml.com	Residential Funding Company, LLC	Custodial
204	1235339729	Bank of America, N.A.	333 South Hope Street Los Angeles, CA 90071	Marilyn Thomas 213-621-4944 marilyn.thomas@baml.com	Residential Funding Company, LLC	Custodial
205	1235339743	Bank of America, N.A.	333 South Hope Street Los Angeles, CA 90071	Marilyn Thomas 213-621-4944 marilyn.thomas@baml.com	Residential Funding Company, LLC	Custodial
206	1235339809	Bank of America, N.A.	333 South Hope Street Los Angeles, CA 90071	Marilyn Thomas 213-621-4944 marilyn.thomas@baml.com	Residential Funding Company, LLC	Custodial
207	1235339823	Bank of America, N.A.	333 South Hope Street Los Angeles, CA 90071	Marilyn Thomas 213-621-4944 marilyn.thomas@baml.com	Residential Funding Company, LLC	Custodial
208	1235339828	Bank of America, N.A.	333 South Hope Street Los Angeles, CA 90071	Marilyn Thomas 213-621-4944 marilyn.thomas@baml.com	Residential Funding Company, LLC	Custodial
209	1235340393	Bank of America, N.A.	333 South Hope Street Los Angeles, CA 90071	Marilyn Thomas 213-621-4944 marilyn.thomas@baml.com	Residential Funding Company, LLC	Custodial
210	1235340398	Bank of America, N.A.	333 South Hope Street Los Angeles, CA 90071	Marilyn Thomas 213-621-4944 marilyn.thomas@baml.com	Residential Funding Company, LLC	Custodial
211	1235340411	Bank of America, N.A.	333 South Hope Street Los Angeles, CA 90071	Marilyn Thomas 213-621-4944 marilyn.thomas@baml.com	Residential Funding Company, LLC	Custodial
212	1235340416	Bank of America, N.A.	333 South Hope Street Los Angeles, CA 90071	Marilyn Thomas 213-621-4944 marilyn.thomas@baml.com	Residential Funding Company, LLC	Custodial
213	1235340430	Bank of America, N.A.	333 South Hope Street Los Angeles, CA 90071	Marilyn Thomas 213-621-4944 marilyn.thomas@baml.com	Residential Funding Company, LLC	Custodial
214	1235340435	Bank of America, N.A.	333 South Hope Street Los Angeles, CA 90071	Marilyn Thomas 213-621-4944 marilyn.thomas@baml.com	Residential Funding Company, LLC	Custodial
215	1235340454	Bank of America, N.A.	333 South Hope Street Los Angeles, CA 90071	Marilyn Thomas 213-621-4944 marilyn.thomas@baml.com	Residential Funding Company, LLC	Custodial

Privileged and Confidential

Exhibit B - Bank Accounts

Ref #	Account Number	Bank	Address	Contact	Corporate/Company Code	Account Type
216	1235340459	Bank of America, N.A.	333 South Hope Street Los Angeles, CA 90071	Marilyn Thomas 213-621-4944 marilyn.thomas@baml.com	Residential Funding Company, LLC	Custodial
217	1235340473	Bank of America, N.A.	333 South Hope Street Los Angeles, CA 90071	Marilyn Thomas 213-621-4944 marilyn.thomas@baml.com	Residential Funding Company, LLC	Custodial
218	1235340478	Bank of America, N.A.	333 South Hope Street Los Angeles, CA 90071	Marilyn Thomas 213-621-4944 marilyn.thomas@baml.com	Residential Funding Company, LLC	Custodial
219	1235340492	Bank of America, N.A.	333 South Hope Street Los Angeles, CA 90071	Marilyn Thomas 213-621-4944 marilyn.thomas@baml.com	Residential Funding Company, LLC	Custodial
220	1235340497	Bank of America, N.A.	333 South Hope Street Los Angeles, CA 90071	Marilyn Thomas 213-621-4944 marilyn.thomas@baml.com	Residential Funding Company, LLC	Custodial
221	1235340510	Bank of America, N.A.	333 South Hope Street Los Angeles, CA 90071	Marilyn Thomas 213-621-4944 marilyn.thomas@baml.com	Residential Funding Company, LLC	Custodial
222	1235340515	Bank of America, N.A.	333 South Hope Street Los Angeles, CA 90071	Marilyn Thomas 213-621-4944 marilyn.thomas@baml.com	Residential Funding Company, LLC	Custodial
223	1235340558	Bank of America, N.A.	333 South Hope Street Los Angeles, CA 90071	Marilyn Thomas 213-621-4944 marilyn.thomas@baml.com	Residential Funding Company, LLC	Custodial
224	1235340572	Bank of America, N.A.	333 South Hope Street Los Angeles, CA 90071	Marilyn Thomas 213-621-4944 marilyn.thomas@baml.com	Residential Funding Company, LLC	Custodial
225	1235340577	Bank of America, N.A.	333 South Hope Street Los Angeles, CA 90071	Marilyn Thomas 213-621-4944 marilyn.thomas@baml.com	Residential Funding Company, LLC	Custodial
226	1235340591	Bank of America, N.A.	333 South Hope Street Los Angeles, CA 90071	Marilyn Thomas 213-621-4944 marilyn.thomas@baml.com	Residential Funding Company, LLC	Custodial
227	1235340596	Bank of America, N.A.	333 South Hope Street Los Angeles, CA 90071	Marilyn Thomas 213-621-4944 marilyn.thomas@baml.com	Residential Funding Company, LLC	Custodial
228	1235340614	Bank of America, N.A.	333 South Hope Street Los Angeles, CA 90071	Marilyn Thomas 213-621-4944 marilyn.thomas@baml.com	Residential Funding Company, LLC	Custodial
229	1235340619	Bank of America, N.A.	333 South Hope Street Los Angeles, CA 90071	Marilyn Thomas 213-621-4944 marilyn.thomas@baml.com	Residential Funding Company, LLC	Custodial
230	1235340657	Bank of America, N.A.	333 South Hope Street Los Angeles, CA 90071	Marilyn Thomas 213-621-4944 marilyn.thomas@baml.com	Residential Funding Company, LLC	Custodial
231	1235340671	Bank of America, N.A.	333 South Hope Street Los Angeles, CA 90071	Marilyn Thomas 213-621-4944 marilyn.thomas@baml.com	Residential Funding Company, LLC	Custodial
232	1235340676	Bank of America, N.A.	333 South Hope Street Los Angeles, CA 90071	Marilyn Thomas 213-621-4944 marilyn.thomas@baml.com	Residential Funding Company, LLC	Custodial
233	1235340690	Bank of America, N.A.	333 South Hope Street Los Angeles, CA 90071	Marilyn Thomas 213-621-4944 marilyn.thomas@baml.com	Residential Funding Company, LLC	Custodial
234	1235340695	Bank of America, N.A.	333 South Hope Street Los Angeles, CA 90071	Marilyn Thomas 213-621-4944 marilyn.thomas@baml.com	Residential Funding Company, LLC	Custodial
235	1235340713	Bank of America, N.A.	333 South Hope Street Los Angeles, CA 90071	Marilyn Thomas 213-621-4944 marilyn.thomas@baml.com	Residential Funding Company, LLC	Custodial
236	1235340718	Bank of America, N.A.	333 South Hope Street Los Angeles, CA 90071	Marilyn Thomas 213-621-4944 marilyn.thomas@baml.com	Residential Funding Company, LLC	Custodial
237	1235340751	Bank of America, N.A.	333 South Hope Street Los Angeles, CA 90071	Marilyn Thomas 213-621-4944 marilyn.thomas@baml.com	Residential Funding Company, LLC	Custodial
238	1235340756	Bank of America, N.A.	333 South Hope Street Los Angeles, CA 90071	Marilyn Thomas 213-621-4944 marilyn.thomas@baml.com	Residential Funding Company, LLC	Custodial
239	1235340770	Bank of America, N.A.	333 South Hope Street Los Angeles, CA 90071	Marilyn Thomas 213-621-4944 marilyn.thomas@baml.com	Residential Funding Company, LLC	Custodial
240	1235340775	Bank of America, N.A.	333 South Hope Street Los Angeles, CA 90071	Marilyn Thomas 213-621-4944 marilyn.thomas@baml.com	Residential Funding Company, LLC	Custodial
241	1235340794	Bank of America, N.A.	333 South Hope Street Los Angeles, CA 90071	Marilyn Thomas 213-621-4944 marilyn.thomas@baml.com	Residential Funding Company, LLC	Custodial
242	1235340799	Bank of America, N.A.	333 South Hope Street Los Angeles, CA 90071	Marilyn Thomas 213-621-4944 marilyn.thomas@baml.com	Residential Funding Company, LLC	Custodial
243	1235340812	Bank of America, N.A.	333 South Hope Street Los Angeles, CA 90071	Marilyn Thomas 213-621-4944 marilyn.thomas@baml.com	Residential Funding Company, LLC	Custodial
244	1235340817	Bank of America, N.A.	333 South Hope Street Los Angeles, CA 90071	Marilyn Thomas 213-621-4944 marilyn.thomas@baml.com	Residential Funding Company, LLC	Custodial
245	1235340850	Bank of America, N.A.	333 South Hope Street Los Angeles, CA 90071	Marilyn Thomas 213-621-4944 marilyn.thomas@baml.com	Residential Funding Company, LLC	Custodial
246	1235340855	Bank of America, N.A.	333 South Hope Street Los Angeles, CA 90071	Marilyn Thomas 213-621-4944 marilyn.thomas@baml.com	Residential Funding Company, LLC	Custodial
247	1235340874	Bank of America, N.A.	333 South Hope Street Los Angeles, CA 90071	Marilyn Thomas 213-621-4944 marilyn.thomas@baml.com	Residential Funding Company, LLC	Custodial
248	1235340879	Bank of America, N.A.	333 South Hope Street Los Angeles, CA 90071	Marilyn Thomas 213-621-4944 marilyn.thomas@baml.com	Residential Funding Company, LLC	Custodial
249	1235341062	Bank of America, N.A.	333 South Hope Street Los Angeles, CA 90071	Marilyn Thomas 213-621-4944 marilyn.thomas@baml.com	Residential Funding Company, LLC	Custodial
250	1235341067	Bank of America, N.A.	333 South Hope Street Los Angeles, CA 90071	Marilyn Thomas 213-621-4944 marilyn.thomas@baml.com	Residential Funding Company, LLC	Custodial
251	1235341081	Bank of America, N.A.	333 South Hope Street Los Angeles, CA 90071	Marilyn Thomas 213-621-4944 marilyn.thomas@baml.com	Residential Funding Company, LLC	Custodial
252	1235341086	Bank of America, N.A.	333 South Hope Street Los Angeles, CA 90071	Marilyn Thomas 213-621-4944 marilyn.thomas@baml.com	Residential Funding Company, LLC	Custodial
253	1235341104	Bank of America, N.A.	333 South Hope Street Los Angeles, CA 90071	Marilyn Thomas 213-621-4944 marilyn.thomas@baml.com	Residential Funding Company, LLC	Custodial
254	1235341109	Bank of America, N.A.	333 South Hope Street Los Angeles, CA 90071	Marilyn Thomas 213-621-4944 marilyn.thomas@baml.com	Residential Funding Company, LLC	Custodial
255	1235341123	Bank of America, N.A.	333 South Hope Street Los Angeles, CA 90071	Marilyn Thomas 213-621-4944 marilyn.thomas@baml.com	Residential Funding Company, LLC	Custodial
256	1235341128	Bank of America, N.A.	333 South Hope Street Los Angeles, CA 90071	Marilyn Thomas 213-621-4944 marilyn.thomas@baml.com	Residential Funding Company, LLC	Custodial
257	1235341142	Bank of America, N.A.	333 South Hope Street Los Angeles, CA 90071	Marilyn Thomas 213-621-4944 marilyn.thomas@baml.com	Residential Funding Company, LLC	Custodial
258	1235341147	Bank of America, N.A.	333 South Hope Street Los Angeles, CA 90071	Marilyn Thomas 213-621-4944 marilyn.thomas@baml.com	Residential Funding Company, LLC	Custodial

Privileged and Confidential

Exhibit B - Bank Accounts

Ref #	Account Number	Bank	Address	Contact	Corporate/Company Code	Account Type
259	1235341161	Bank of America, N.A.	333 South Hope Street Los Angeles, CA 90071	Marilyn Thomas 213-621-4944 marilyn.thomas@baml.com	Residential Funding Company, LLC	Custodial
260	1235341166	Bank of America, N.A.	333 South Hope Street Los Angeles, CA 90071	Marilyn Thomas 213-621-4944 marilyn.thomas@baml.com	Residential Funding Company, LLC	Custodial
261	1235341180	Bank of America, N.A.	333 South Hope Street Los Angeles, CA 90071	Marilyn Thomas 213-621-4944 marilyn.thomas@baml.com	Residential Funding Company, LLC	Custodial
262	1235341185	Bank of America, N.A.	333 South Hope Street Los Angeles, CA 90071	Marilyn Thomas 213-621-4944 marilyn.thomas@baml.com	Residential Funding Company, LLC	Custodial
263	1235341203	Bank of America, N.A.	333 South Hope Street Los Angeles, CA 90071	Marilyn Thomas 213-621-4944 marilyn.thomas@baml.com	Residential Funding Company, LLC	Custodial
264	1235341208	Bank of America, N.A.	333 South Hope Street Los Angeles, CA 90071	Marilyn Thomas 213-621-4944 marilyn.thomas@baml.com	Residential Funding Company, LLC	Custodial
265	1235341222	Bank of America, N.A.	333 South Hope Street Los Angeles, CA 90071	Marilyn Thomas 213-621-4944 marilyn.thomas@baml.com	Residential Funding Company, LLC	Custodial
266	1235341227	Bank of America, N.A.	333 South Hope Street Los Angeles, CA 90071	Marilyn Thomas 213-621-4944 marilyn.thomas@baml.com	Residential Funding Company, LLC	Custodial
267	1235341241	Bank of America, N.A.	333 South Hope Street Los Angeles, CA 90071	Marilyn Thomas 213-621-4944 marilyn.thomas@baml.com	Residential Funding Company, LLC	Custodial
268	1235341246	Bank of America, N.A.	333 South Hope Street Los Angeles, CA 90071	Marilyn Thomas 213-621-4944 marilyn.thomas@baml.com	Residential Funding Company, LLC	Custodial
269	1235341260	Bank of America, N.A.	333 South Hope Street Los Angeles, CA 90071	Marilyn Thomas 213-621-4944 marilyn.thomas@baml.com	Residential Funding Company, LLC	Custodial
270	1235341265	Bank of America, N.A.	333 South Hope Street Los Angeles, CA 90071	Marilyn Thomas 213-621-4944 marilyn.thomas@baml.com	Residential Funding Company, LLC	Custodial
271	1235341284	Bank of America, N.A.	333 South Hope Street Los Angeles, CA 90071	Marilyn Thomas 213-621-4944 marilyn.thomas@baml.com	Residential Funding Company, LLC	Custodial
272	1235341289	Bank of America, N.A.	333 South Hope Street Los Angeles, CA 90071	Marilyn Thomas 213-621-4944 marilyn.thomas@baml.com	Residential Funding Company, LLC	Custodial
273	1235341302	Bank of America, N.A.	333 South Hope Street Los Angeles, CA 90071	Marilyn Thomas 213-621-4944 marilyn.thomas@baml.com	Residential Funding Company, LLC	Custodial
274	1235341307	Bank of America, N.A.	333 South Hope Street Los Angeles, CA 90071	Marilyn Thomas 213-621-4944 marilyn.thomas@baml.com	Residential Funding Company, LLC	Custodial
275	1235341321	Bank of America, N.A.	333 South Hope Street Los Angeles, CA 90071	Marilyn Thomas 213-621-4944 marilyn.thomas@baml.com	Residential Funding Company, LLC	Custodial
276	1235341326	Bank of America, N.A.	333 South Hope Street Los Angeles, CA 90071	Marilyn Thomas 213-621-4944 marilyn.thomas@baml.com	Residential Funding Company, LLC	Custodial
277	1235341340	Bank of America, N.A.	333 South Hope Street Los Angeles, CA 90071	Marilyn Thomas 213-621-4944 marilyn.thomas@baml.com	Residential Funding Company, LLC	Custodial
278	1235341345	Bank of America, N.A.	333 South Hope Street Los Angeles, CA 90071	Marilyn Thomas 213-621-4944 marilyn.thomas@baml.com	Residential Funding Company, LLC	Custodial
279	1235341364	Bank of America, N.A.	333 South Hope Street Los Angeles, CA 90071	Marilyn Thomas 213-621-4944 marilyn.thomas@baml.com	Residential Funding Company, LLC	Custodial
280	1235341369	Bank of America, N.A.	333 South Hope Street Los Angeles, CA 90071	Marilyn Thomas 213-621-4944 marilyn.thomas@baml.com	Residential Funding Company, LLC	Custodial
281	1235341383	Bank of America, N.A.	333 South Hope Street Los Angeles, CA 90071	Marilyn Thomas 213-621-4944 marilyn.thomas@baml.com	Residential Funding Company, LLC	Custodial
282	1235341388	Bank of America, N.A.	333 South Hope Street Los Angeles, CA 90071	Marilyn Thomas 213-621-4944 marilyn.thomas@baml.com	Residential Funding Company, LLC	Custodial
283	1235341401	Bank of America, N.A.	333 South Hope Street Los Angeles, CA 90071	Marilyn Thomas 213-621-4944 marilyn.thomas@baml.com	Residential Funding Company, LLC	Custodial
284	1235341406	Bank of America, N.A.	333 South Hope Street Los Angeles, CA 90071	Marilyn Thomas 213-621-4944 marilyn.thomas@baml.com	Residential Funding Company, LLC	Custodial
285	1235341420	Bank of America, N.A.	333 South Hope Street Los Angeles, CA 90071	Marilyn Thomas 213-621-4944 marilyn.thomas@baml.com	Residential Funding Company, LLC	Custodial
286	1235341425	Bank of America, N.A.	333 South Hope Street Los Angeles, CA 90071	Marilyn Thomas 213-621-4944 marilyn.thomas@baml.com	Residential Funding Company, LLC	Custodial
287	1235341444	Bank of America, N.A.	333 South Hope Street Los Angeles, CA 90071	Marilyn Thomas 213-621-4944 marilyn.thomas@baml.com	Residential Funding Company, LLC	Custodial
288	1235341449	Bank of America, N.A.	333 South Hope Street Los Angeles, CA 90071	Marilyn Thomas 213-621-4944 marilyn.thomas@baml.com	Residential Funding Company, LLC	Custodial
289	1235341463	Bank of America, N.A.	333 South Hope Street Los Angeles, CA 90071	Marilyn Thomas 213-621-4944 marilyn.thomas@baml.com	Residential Funding Company, LLC	Custodial
290	1235341468	Bank of America, N.A.	333 South Hope Street Los Angeles, CA 90071	Marilyn Thomas 213-621-4944 marilyn.thomas@baml.com	Residential Funding Company, LLC	Custodial
291	1235341482	Bank of America, N.A.	333 South Hope Street Los Angeles, CA 90071	Marilyn Thomas 213-621-4944 marilyn.thomas@baml.com	Residential Funding Company, LLC	Custodial
292	1235341487	Bank of America, N.A.	333 South Hope Street Los Angeles, CA 90071	Marilyn Thomas 213-621-4944 marilyn.thomas@baml.com	Residential Funding Company, LLC	Custodial
293	1235341500	Bank of America, N.A.	333 South Hope Street Los Angeles, CA 90071	Marilyn Thomas 213-621-4944 marilyn.thomas@baml.com	Residential Funding Company, LLC	Custodial
294	1235341505	Bank of America, N.A.	333 South Hope Street Los Angeles, CA 90071	Marilyn Thomas 213-621-4944 marilyn.thomas@baml.com	Residential Funding Company, LLC	Custodial
295	1235341524	Bank of America, N.A.	333 South Hope Street Los Angeles, CA 90071	Marilyn Thomas 213-621-4944 marilyn.thomas@baml.com	Residential Funding Company, LLC	Custodial
296	1235341543	Bank of America, N.A.	333 South Hope Street Los Angeles, CA 90071	Marilyn Thomas 213-621-4944 marilyn.thomas@baml.com	Residential Funding Company, LLC	Custodial
297	1235341548	Bank of America, N.A.	333 South Hope Street Los Angeles, CA 90071	Marilyn Thomas 213-621-4944 marilyn.thomas@baml.com	Residential Funding Company, LLC	Custodial
298	1235341680	Bank of America, N.A.	333 South Hope Street Los Angeles, CA 90071	Marilyn Thomas 213-621-4944 marilyn.thomas@baml.com	Residential Funding Company, LLC	Custodial
299	1235341685	Bank of America, N.A.	333 South Hope Street Los Angeles, CA 90071	Marilyn Thomas 213-621-4944 marilyn.thomas@baml.com	Residential Funding Company, LLC	Custodial
300	1235341703	Bank of America, N.A.	333 South Hope Street Los Angeles, CA 90071	Marilyn Thomas 213-621-4944 marilyn.thomas@baml.com	Residential Funding Company, LLC	Custodial
301	1235341708	Bank of America, N.A.	333 South Hope Street Los Angeles, CA 90071	Marilyn Thomas 213-621-4944 marilyn.thomas@baml.com	Residential Funding Company, LLC	Custodial

Privileged and Confidential

Exhibit B - Bank Accounts

Ref #	Account Number	Bank	Address	Contact	Corporate/Company Code	Account Type
302	1235341722	Bank of America, N.A.	333 South Hope Street Los Angeles, CA 90071	Marilyn Thomas 213-621-4944 marilyn.thomas@baml.com	Residential Funding Company, LLC	Custodial
303	1235341727	Bank of America, N.A.	333 South Hope Street Los Angeles, CA 90071	Marilyn Thomas 213-621-4944 marilyn.thomas@baml.com	Residential Funding Company, LLC	Custodial
304	1235341741	Bank of America, N.A.	333 South Hope Street Los Angeles, CA 90071	Marilyn Thomas 213-621-4944 marilyn.thomas@baml.com	Residential Funding Company, LLC	Custodial
305	1235341746	Bank of America, N.A.	333 South Hope Street Los Angeles, CA 90071	Marilyn Thomas 213-621-4944 marilyn.thomas@baml.com	Residential Funding Company, LLC	Custodial
306	1235341760	Bank of America, N.A.	333 South Hope Street Los Angeles, CA 90071	Marilyn Thomas 213-621-4944 marilyn.thomas@baml.com	Residential Funding Company, LLC	Custodial
307	1235341765	Bank of America, N.A.	333 South Hope Street Los Angeles, CA 90071	Marilyn Thomas 213-621-4944 marilyn.thomas@baml.com	Residential Funding Company, LLC	Custodial
308	1235341784	Bank of America, N.A.	333 South Hope Street Los Angeles, CA 90071	Marilyn Thomas 213-621-4944 marilyn.thomas@baml.com	Residential Funding Company, LLC	Custodial
309	1235341789	Bank of America, N.A.	333 South Hope Street Los Angeles, CA 90071	Marilyn Thomas 213-621-4944 marilyn.thomas@baml.com	Residential Funding Company, LLC	Custodial
310	1235341802	Bank of America, N.A.	333 South Hope Street Los Angeles, CA 90071	Marilyn Thomas 213-621-4944 marilyn.thomas@baml.com	Residential Funding Company, LLC	Custodial
311	1235341807	Bank of America, N.A.	333 South Hope Street Los Angeles, CA 90071	Marilyn Thomas 213-621-4944 marilyn.thomas@baml.com	Residential Funding Company, LLC	Custodial
312	1235341821	Bank of America, N.A.	333 South Hope Street Los Angeles, CA 90071	Marilyn Thomas 213-621-4944 marilyn.thomas@baml.com	Residential Funding Company, LLC	Custodial
313	1235341826	Bank of America, N.A.	333 South Hope Street Los Angeles, CA 90071	Marilyn Thomas 213-621-4944 marilyn.thomas@baml.com	Residential Funding Company, LLC	Custodial
314	1235341840	Bank of America, N.A.	333 South Hope Street Los Angeles, CA 90071	Marilyn Thomas 213-621-4944 marilyn.thomas@baml.com	Residential Funding Company, LLC	Custodial
315	1235341845	Bank of America, N.A.	333 South Hope Street Los Angeles, CA 90071	Marilyn Thomas 213-621-4944 marilyn.thomas@baml.com	Residential Funding Company, LLC	Custodial
316	1235341864	Bank of America, N.A.	333 South Hope Street Los Angeles, CA 90071	Marilyn Thomas 213-621-4944 marilyn.thomas@baml.com	Residential Funding Company, LLC	Custodial
317	1235341869	Bank of America, N.A.	333 South Hope Street Los Angeles, CA 90071	Marilyn Thomas 213-621-4944 marilyn.thomas@baml.com	Residential Funding Company, LLC	Custodial
318	1235341883	Bank of America, N.A.	333 South Hope Street Los Angeles, CA 90071	Marilyn Thomas 213-621-4944 marilyn.thomas@baml.com	Residential Funding Company, LLC	Custodial
319	1235341888	Bank of America, N.A.	333 South Hope Street Los Angeles, CA 90071	Marilyn Thomas 213-621-4944 marilyn.thomas@baml.com	Residential Funding Company, LLC	Custodial
320	1235341901	Bank of America, N.A.	333 South Hope Street Los Angeles, CA 90071	Marilyn Thomas 213-621-4944 marilyn.thomas@baml.com	Residential Funding Company, LLC	Custodial
321	1235341906	Bank of America, N.A.	333 South Hope Street Los Angeles, CA 90071	Marilyn Thomas 213-621-4944 marilyn.thomas@baml.com	Residential Funding Company, LLC	Custodial
322	1235341920	Bank of America, N.A.	333 South Hope Street Los Angeles, CA 90071	Marilyn Thomas 213-621-4944 marilyn.thomas@baml.com	Residential Funding Company, LLC	Custodial
323	1235341925	Bank of America, N.A.	333 South Hope Street Los Angeles, CA 90071	Marilyn Thomas 213-621-4944 marilyn.thomas@baml.com	Residential Funding Company, LLC	Custodial
324	1235341944	Bank of America, N.A.	333 South Hope Street Los Angeles, CA 90071	Marilyn Thomas 213-621-4944 marilyn.thomas@baml.com	Residential Funding Company, LLC	Custodial
325	1235341949	Bank of America, N.A.	333 South Hope Street Los Angeles, CA 90071	Marilyn Thomas 213-621-4944 marilyn.thomas@baml.com	Residential Funding Company, LLC	Custodial
326	1235341963	Bank of America, N.A.	333 South Hope Street Los Angeles, CA 90071	Marilyn Thomas 213-621-4944 marilyn.thomas@baml.com	Residential Funding Company, LLC	Custodial
327	1235341968	Bank of America, N.A.	333 South Hope Street Los Angeles, CA 90071	Marilyn Thomas 213-621-4944 marilyn.thomas@baml.com	Residential Funding Company, LLC	Custodial
328	1235341982	Bank of America, N.A.	333 South Hope Street Los Angeles, CA 90071	Marilyn Thomas 213-621-4944 marilyn.thomas@baml.com	Residential Funding Company, LLC	Custodial
329	1235341987	Bank of America, N.A.	333 South Hope Street Los Angeles, CA 90071	Marilyn Thomas 213-621-4944 marilyn.thomas@baml.com	Residential Funding Company, LLC	Custodial
330	1235342014	Bank of America, N.A.	333 South Hope Street Los Angeles, CA 90071	Marilyn Thomas 213-621-4944 marilyn.thomas@baml.com	Residential Funding Company, LLC	Custodial
331	1235342019	Bank of America, N.A.	333 South Hope Street Los Angeles, CA 90071	Marilyn Thomas 213-621-4944 marilyn.thomas@baml.com	Residential Funding Company, LLC	Custodial
332	1235342033	Bank of America, N.A.	333 South Hope Street Los Angeles, CA 90071	Marilyn Thomas 213-621-4944 marilyn.thomas@baml.com	Residential Funding Company, LLC	Custodial
333	1235342038	Bank of America, N.A.	333 South Hope Street Los Angeles, CA 90071	Marilyn Thomas 213-621-4944 marilyn.thomas@baml.com	Residential Funding Company, LLC	Custodial
334	1235342052	Bank of America, N.A.	333 South Hope Street Los Angeles, CA 90071	Marilyn Thomas 213-621-4944 marilyn.thomas@baml.com	Residential Funding Company, LLC	Custodial
335	1235342057	Bank of America, N.A.	333 South Hope Street Los Angeles, CA 90071	Marilyn Thomas 213-621-4944 marilyn.thomas@baml.com	Residential Funding Company, LLC	Custodial
336	1235342071	Bank of America, N.A.	333 South Hope Street Los Angeles, CA 90071	Marilyn Thomas 213-621-4944 marilyn.thomas@baml.com	Residential Funding Company, LLC	Custodial
337	1235342076	Bank of America, N.A.	333 South Hope Street Los Angeles, CA 90071	Marilyn Thomas 213-621-4944 marilyn.thomas@baml.com	Residential Funding Company, LLC	Custodial
338	1235342090	Bank of America, N.A.	333 South Hope Street Los Angeles, CA 90071	Marilyn Thomas 213-621-4944 marilyn.thomas@baml.com	Residential Funding Company, LLC	Custodial
339	1235342095	Bank of America, N.A.	333 South Hope Street Los Angeles, CA 90071	Marilyn Thomas 213-621-4944 marilyn.thomas@baml.com	Residential Funding Company, LLC	Custodial
340	1235342113	Bank of America, N.A.	333 South Hope Street Los Angeles, CA 90071	Marilyn Thomas 213-621-4944 marilyn.thomas@baml.com	Residential Funding Company, LLC	Custodial
341	1235342118	Bank of America, N.A.	333 South Hope Street Los Angeles, CA 90071	Marilyn Thomas 213-621-4944 marilyn.thomas@baml.com	Residential Funding Company, LLC	Custodial
342	1235342132	Bank of America, N.A.	333 South Hope Street Los Angeles, CA 90071	Marilyn Thomas 213-621-4944 marilyn.thomas@baml.com	Residential Funding Company, LLC	Custodial
343	1235342137	Bank of America, N.A.	333 South Hope Street Los Angeles, CA 90071	Marilyn Thomas 213-621-4944 marilyn.thomas@baml.com	Residential Funding Company, LLC	Custodial
344	1235342151	Bank of America, N.A.	333 South Hope Street Los Angeles, CA 90071	Marilyn Thomas 213-621-4944 marilyn.thomas@baml.com	Residential Funding Company, LLC	Custodial

Privileged and Confidential

Exhibit B - Bank Accounts

Ref #	Account Number	Bank	Address	Contact	Corporate/Company Code	Account Type
345	1235342156	Bank of America, N.A.	333 South Hope Street Los Angeles, CA 90071	Marilyn Thomas 213-621-4944 marilyn.thomas@baml.com	Residential Funding Company, LLC	Custodial
346	1235342170	Bank of America, N.A.	333 South Hope Street Los Angeles, CA 90071	Marilyn Thomas 213-621-4944 marilyn.thomas@baml.com	Residential Funding Company, LLC	Custodial
347	1235342175	Bank of America, N.A.	333 South Hope Street Los Angeles, CA 90071	Marilyn Thomas 213-621-4944 marilyn.thomas@baml.com	Residential Funding Company, LLC	Custodial
348	1235342415	Bank of America, N.A.	333 South Hope Street Los Angeles, CA 90071	Marilyn Thomas 213-621-4944 marilyn.thomas@baml.com	Residential Funding Company, LLC	Custodial
349	1235342434	Bank of America, N.A.	333 South Hope Street Los Angeles, CA 90071	Marilyn Thomas 213-621-4944 marilyn.thomas@baml.com	Residential Funding Company, LLC	Custodial
350	1235342439	Bank of America, N.A.	333 South Hope Street Los Angeles, CA 90071	Marilyn Thomas 213-621-4944 marilyn.thomas@baml.com	Residential Funding Company, LLC	Custodial
351	1235342453	Bank of America, N.A.	333 South Hope Street Los Angeles, CA 90071	Marilyn Thomas 213-621-4944 marilyn.thomas@baml.com	Residential Funding Company, LLC	Custodial
352	1235342458	Bank of America, N.A.	333 South Hope Street Los Angeles, CA 90071	Marilyn Thomas 213-621-4944 marilyn.thomas@baml.com	Residential Funding Company, LLC	Custodial
353	1235342472	Bank of America, N.A.	333 South Hope Street Los Angeles, CA 90071	Marilyn Thomas 213-621-4944 marilyn.thomas@baml.com	Residential Funding Company, LLC	Custodial
354	1235342477	Bank of America, N.A.	333 South Hope Street Los Angeles, CA 90071	Marilyn Thomas 213-621-4944 marilyn.thomas@baml.com	Residential Funding Company, LLC	Custodial
355	1235342491	Bank of America, N.A.	333 South Hope Street Los Angeles, CA 90071	Marilyn Thomas 213-621-4944 marilyn.thomas@baml.com	Residential Funding Company, LLC	Custodial
356	1235342496	Bank of America, N.A.	333 South Hope Street Los Angeles, CA 90071	Marilyn Thomas 213-621-4944 marilyn.thomas@baml.com	Residential Funding Company, LLC	Custodial
357	1235342514	Bank of America, N.A.	333 South Hope Street Los Angeles, CA 90071	Marilyn Thomas 213-621-4944 marilyn.thomas@baml.com	Residential Funding Company, LLC	Custodial
358	1235342519	Bank of America, N.A.	333 South Hope Street Los Angeles, CA 90071	Marilyn Thomas 213-621-4944 marilyn.thomas@baml.com	Residential Funding Company, LLC	Custodial
359	1235342533	Bank of America, N.A.	333 South Hope Street Los Angeles, CA 90071	Marilyn Thomas 213-621-4944 marilyn.thomas@baml.com	Residential Funding Company, LLC	Custodial
360	1235342538	Bank of America, N.A.	333 South Hope Street Los Angeles, CA 90071	Marilyn Thomas 213-621-4944 marilyn.thomas@baml.com	Residential Funding Company, LLC	Custodial
361	1235342552	Bank of America, N.A.	333 South Hope Street Los Angeles, CA 90071	Marilyn Thomas 213-621-4944 marilyn.thomas@baml.com	Residential Funding Company, LLC	Custodial
362	1235342557	Bank of America, N.A.	333 South Hope Street Los Angeles, CA 90071	Marilyn Thomas 213-621-4944 marilyn.thomas@baml.com	Residential Funding Company, LLC	Custodial
363	1235342571	Bank of America, N.A.	333 South Hope Street Los Angeles, CA 90071	Marilyn Thomas 213-621-4944 marilyn.thomas@baml.com	Residential Funding Company, LLC	Custodial
364	1235342576	Bank of America, N.A.	333 South Hope Street Los Angeles, CA 90071	Marilyn Thomas 213-621-4944 marilyn.thomas@baml.com	Residential Funding Company, LLC	Custodial
365	1235342590	Bank of America, N.A.	333 South Hope Street Los Angeles, CA 90071	Marilyn Thomas 213-621-4944 marilyn.thomas@baml.com	Residential Funding Company, LLC	Custodial
366	1235342595	Bank of America, N.A.	333 South Hope Street Los Angeles, CA 90071	Marilyn Thomas 213-621-4944 marilyn.thomas@baml.com	Residential Funding Company, LLC	Custodial
367	1235342613	Bank of America, N.A.	333 South Hope Street Los Angeles, CA 90071	Marilyn Thomas 213-621-4944 marilyn.thomas@baml.com	Residential Funding Company, LLC	Custodial
368	1235342618	Bank of America, N.A.	333 South Hope Street Los Angeles, CA 90071	Marilyn Thomas 213-621-4944 marilyn.thomas@baml.com	Residential Funding Company, LLC	Custodial
369	1235342632	Bank of America, N.A.	333 South Hope Street Los Angeles, CA 90071	Marilyn Thomas 213-621-4944 marilyn.thomas@baml.com	Residential Funding Company, LLC	Custodial
370	1235342637	Bank of America, N.A.	333 South Hope Street Los Angeles, CA 90071	Marilyn Thomas 213-621-4944 marilyn.thomas@baml.com	Residential Funding Company, LLC	Custodial
371	1235342651	Bank of America, N.A.	333 South Hope Street Los Angeles, CA 90071	Marilyn Thomas 213-621-4944 marilyn.thomas@baml.com	Residential Funding Company, LLC	Custodial
372	1235342656	Bank of America, N.A.	333 South Hope Street Los Angeles, CA 90071	Marilyn Thomas 213-621-4944 marilyn.thomas@baml.com	Residential Funding Company, LLC	Custodial
373	1235342670	Bank of America, N.A.	333 South Hope Street Los Angeles, CA 90071	Marilyn Thomas 213-621-4944 marilyn.thomas@baml.com	Residential Funding Company, LLC	Custodial
374	1235342675	Bank of America, N.A.	333 South Hope Street Los Angeles, CA 90071	Marilyn Thomas 213-621-4944 marilyn.thomas@baml.com	Residential Funding Company, LLC	Custodial
375	1235342694	Bank of America, N.A.	333 South Hope Street Los Angeles, CA 90071	Marilyn Thomas 213-621-4944 marilyn.thomas@baml.com	Residential Funding Company, LLC	Custodial
376	1235342699	Bank of America, N.A.	333 South Hope Street Los Angeles, CA 90071	Marilyn Thomas 213-621-4944 marilyn.thomas@baml.com	Residential Funding Company, LLC	Custodial
377	1235342712	Bank of America, N.A.	333 South Hope Street Los Angeles, CA 90071	Marilyn Thomas 213-621-4944 marilyn.thomas@baml.com	Residential Funding Company, LLC	Custodial
378	1235342717	Bank of America, N.A.	333 South Hope Street Los Angeles, CA 90071	Marilyn Thomas 213-621-4944 marilyn.thomas@baml.com	Residential Funding Company, LLC	Custodial
379	1235342731	Bank of America, N.A.	333 South Hope Street Los Angeles, CA 90071	Marilyn Thomas 213-621-4944 marilyn.thomas@baml.com	Residential Funding Company, LLC	Custodial
380	1235342736	Bank of America, N.A.	333 South Hope Street Los Angeles, CA 90071	Marilyn Thomas 213-621-4944 marilyn.thomas@baml.com	Residential Funding Company, LLC	Custodial
381	1235342750	Bank of America, N.A.	333 South Hope Street Los Angeles, CA 90071	Marilyn Thomas 213-621-4944 marilyn.thomas@baml.com	Residential Funding Company, LLC	Custodial
382	1235342755	Bank of America, N.A.	333 South Hope Street Los Angeles, CA 90071	Marilyn Thomas 213-621-4944 marilyn.thomas@baml.com	Residential Funding Company, LLC	Custodial
383	1235342774	Bank of America, N.A.	333 South Hope Street Los Angeles, CA 90071	Marilyn Thomas 213-621-4944 marilyn.thomas@baml.com	Residential Funding Company, LLC	Custodial
384	1235342779	Bank of America, N.A.	333 South Hope Street Los Angeles, CA 90071	Marilyn Thomas 213-621-4944 marilyn.thomas@baml.com	Residential Funding Company, LLC	Custodial
385	1235342793	Bank of America, N.A.	333 South Hope Street Los Angeles, CA 90071	Marilyn Thomas 213-621-4944 marilyn.thomas@baml.com	Residential Funding Company, LLC	Custodial
386	1235342798	Bank of America, N.A.	333 South Hope Street Los Angeles, CA 90071	Marilyn Thomas 213-621-4944 marilyn.thomas@baml.com	Residential Funding Company, LLC	Custodial
387	1235342811	Bank of America, N.A.	333 South Hope Street Los Angeles, CA 90071	Marilyn Thomas 213-621-4944 marilyn.thomas@baml.com	Residential Funding Company, LLC	Custodial

Privileged and Confidential

Exhibit B - Bank Accounts

Ref #	Account Number	Bank	Address	Contact	Corporate/Company Code	Account Type
388	1235342816	Bank of America, N.A.	333 South Hope Street Los Angeles, CA 90071	Marilyn Thomas 213-621-4944 marilyn.thomas@baml.com	Residential Funding Company, LLC	Custodial
389	1235342830	Bank of America, N.A.	333 South Hope Street Los Angeles, CA 90071	Marilyn Thomas 213-621-4944 marilyn.thomas@baml.com	Residential Funding Company, LLC	Custodial
390	1235342835	Bank of America, N.A.	333 South Hope Street Los Angeles, CA 90071	Marilyn Thomas 213-621-4944 marilyn.thomas@baml.com	Residential Funding Company, LLC	Custodial
391	1235342854	Bank of America, N.A.	333 South Hope Street Los Angeles, CA 90071	Marilyn Thomas 213-621-4944 marilyn.thomas@baml.com	Residential Funding Company, LLC	Custodial
392	1235342859	Bank of America, N.A.	333 South Hope Street Los Angeles, CA 90071	Marilyn Thomas 213-621-4944 marilyn.thomas@baml.com	Residential Funding Company, LLC	Custodial
393	1235342873	Bank of America, N.A.	333 South Hope Street Los Angeles, CA 90071	Marilyn Thomas 213-621-4944 marilyn.thomas@baml.com	Residential Funding Company, LLC	Custodial
394	1235342878	Bank of America, N.A.	333 South Hope Street Los Angeles, CA 90071	Marilyn Thomas 213-621-4944 marilyn.thomas@baml.com	Residential Funding Company, LLC	Custodial
395	1235342892	Bank of America, N.A.	333 South Hope Street Los Angeles, CA 90071	Marilyn Thomas 213-621-4944 marilyn.thomas@baml.com	Residential Funding Company, LLC	Custodial
396	1235342897	Bank of America, N.A.	333 South Hope Street Los Angeles, CA 90071	Marilyn Thomas 213-621-4944 marilyn.thomas@baml.com	Residential Funding Company, LLC	Custodial
397	1235342910	Bank of America, N.A.	333 South Hope Street Los Angeles, CA 90071	Marilyn Thomas 213-621-4944 marilyn.thomas@baml.com	Residential Funding Company, LLC	Custodial
398	1235342958	Bank of America, N.A.	333 South Hope Street Los Angeles, CA 90071	Marilyn Thomas 213-621-4944 marilyn.thomas@baml.com	Residential Funding Company, LLC	Custodial
399	1235342972	Bank of America, N.A.	333 South Hope Street Los Angeles, CA 90071	Marilyn Thomas 213-621-4944 marilyn.thomas@baml.com	Residential Funding Company, LLC	Custodial
400	1235342977	Bank of America, N.A.	333 South Hope Street Los Angeles, CA 90071	Marilyn Thomas 213-621-4944 marilyn.thomas@baml.com	Residential Funding Company, LLC	Custodial
401	1235342991	Bank of America, N.A.	333 South Hope Street Los Angeles, CA 90071	Marilyn Thomas 213-621-4944 marilyn.thomas@baml.com	Residential Funding Company, LLC	Custodial
402	1235342996	Bank of America, N.A.	333 South Hope Street Los Angeles, CA 90071	Marilyn Thomas 213-621-4944 marilyn.thomas@baml.com	Residential Funding Company, LLC	Custodial
403	1235343004	Bank of America, N.A.	333 South Hope Street Los Angeles, CA 90071	Marilyn Thomas 213-621-4944 marilyn.thomas@baml.com	Residential Funding Company, LLC	Custodial
404	1235343009	Bank of America, N.A.	333 South Hope Street Los Angeles, CA 90071	Marilyn Thomas 213-621-4944 marilyn.thomas@baml.com	Residential Funding Company, LLC	Custodial
405	1235343023	Bank of America, N.A.	333 South Hope Street Los Angeles, CA 90071	Marilyn Thomas 213-621-4944 marilyn.thomas@baml.com	Residential Funding Company, LLC	Custodial
406	1235343028	Bank of America, N.A.	333 South Hope Street Los Angeles, CA 90071	Marilyn Thomas 213-621-4944 marilyn.thomas@baml.com	Residential Funding Company, LLC	Custodial
407	1235343042	Bank of America, N.A.	333 South Hope Street Los Angeles, CA 90071	Marilyn Thomas 213-621-4944 marilyn.thomas@baml.com	Residential Funding Company, LLC	Custodial
408	1235343047	Bank of America, N.A.	333 South Hope Street Los Angeles, CA 90071	Marilyn Thomas 213-621-4944 marilyn.thomas@baml.com	Residential Funding Company, LLC	Custodial
409	1235343061	Bank of America, N.A.	333 South Hope Street Los Angeles, CA 90071	Marilyn Thomas 213-621-4944 marilyn.thomas@baml.com	Residential Funding Company, LLC	Custodial
410	1235343066	Bank of America, N.A.	333 South Hope Street Los Angeles, CA 90071	Marilyn Thomas 213-621-4944 marilyn.thomas@baml.com	Residential Funding Company, LLC	Custodial
411	1235343080	Bank of America, N.A.	333 South Hope Street Los Angeles, CA 90071	Marilyn Thomas 213-621-4944 marilyn.thomas@baml.com	Residential Funding Company, LLC	Custodial
412	1235343108	Bank of America, N.A.	333 South Hope Street Los Angeles, CA 90071	Marilyn Thomas 213-621-4944 marilyn.thomas@baml.com	Residential Funding Company, LLC	Custodial
413	1235343122	Bank of America, N.A.	333 South Hope Street Los Angeles, CA 90071	Marilyn Thomas 213-621-4944 marilyn.thomas@baml.com	Residential Funding Company, LLC	Custodial
414	1235343127	Bank of America, N.A.	333 South Hope Street Los Angeles, CA 90071	Marilyn Thomas 213-621-4944 marilyn.thomas@baml.com	Residential Funding Company, LLC	Custodial
415	1235343141	Bank of America, N.A.	333 South Hope Street Los Angeles, CA 90071	Marilyn Thomas 213-621-4944 marilyn.thomas@baml.com	Residential Funding Company, LLC	Custodial
416	1235343146	Bank of America, N.A.	333 South Hope Street Los Angeles, CA 90071	Marilyn Thomas 213-621-4944 marilyn.thomas@baml.com	Residential Funding Company, LLC	Custodial
417	1235343160	Bank of America, N.A.	333 South Hope Street Los Angeles, CA 90071	Marilyn Thomas 213-621-4944 marilyn.thomas@baml.com	Residential Funding Company, LLC	Custodial
418	1235343165	Bank of America, N.A.	333 South Hope Street Los Angeles, CA 90071	Marilyn Thomas 213-621-4944 marilyn.thomas@baml.com	Residential Funding Company, LLC	Custodial
419	1235343184	Bank of America, N.A.	333 South Hope Street Los Angeles, CA 90071	Marilyn Thomas 213-621-4944 marilyn.thomas@baml.com	Residential Funding Company, LLC	Custodial
420	1235343202	Bank of America, N.A.	333 South Hope Street Los Angeles, CA 90071	Marilyn Thomas 213-621-4944 marilyn.thomas@baml.com	Residential Funding Company, LLC	Custodial
421	1235343207	Bank of America, N.A.	333 South Hope Street Los Angeles, CA 90071	Marilyn Thomas 213-621-4944 marilyn.thomas@baml.com	Residential Funding Company, LLC	Custodial
422	1235343221	Bank of America, N.A.	333 South Hope Street Los Angeles, CA 90071	Marilyn Thomas 213-621-4944 marilyn.thomas@baml.com	Residential Funding Company, LLC	Custodial
423	1235343226	Bank of America, N.A.	333 South Hope Street Los Angeles, CA 90071	Marilyn Thomas 213-621-4944 marilyn.thomas@baml.com	Residential Funding Company, LLC	Custodial
424	1235343240	Bank of America, N.A.	333 South Hope Street Los Angeles, CA 90071	Marilyn Thomas 213-621-4944 marilyn.thomas@baml.com	Residential Funding Company, LLC	Custodial
425	1235343245	Bank of America, N.A.	333 South Hope Street Los Angeles, CA 90071	Marilyn Thomas 213-621-4944 marilyn.thomas@baml.com	Residential Funding Company, LLC	Custodial
426	1235343264	Bank of America, N.A.	333 South Hope Street Los Angeles, CA 90071	Marilyn Thomas 213-621-4944 marilyn.thomas@baml.com	Residential Funding Company, LLC	Custodial
427	1235343269	Bank of America, N.A.	333 South Hope Street Los Angeles, CA 90071	Marilyn Thomas 213-621-4944 marilyn.thomas@baml.com	Residential Funding Company, LLC	Custodial
428	1235343283	Bank of America, N.A.	333 South Hope Street Los Angeles, CA 90071	Marilyn Thomas 213-621-4944 marilyn.thomas@baml.com	Residential Funding Company, LLC	Custodial
429	1235343301	Bank of America, N.A.	333 South Hope Street Los Angeles, CA 90071	Marilyn Thomas 213-621-4944 marilyn.thomas@baml.com	Residential Funding Company, LLC	Custodial
430	1235343306	Bank of America, N.A.	333 South Hope Street Los Angeles, CA 90071	Marilyn Thomas 213-621-4944 marilyn.thomas@baml.com	Residential Funding Company, LLC	Custodial

Privileged and Confidential

Exhibit B - Bank Accounts

Ref #	Account Number	Bank	Address	Contact	Corporate/Company Code	Account Type
431	1235343320	Bank of America, N.A.	333 South Hope Street Los Angeles, CA 90071	Marilyn Thomas 213-621-4944 marilyn.thomas@baml.com	Residential Funding Company, LLC	Custodial
432	1235343325	Bank of America, N.A.	333 South Hope Street Los Angeles, CA 90071	Marilyn Thomas 213-621-4944 marilyn.thomas@baml.com	Residential Funding Company, LLC	Custodial
433	1235343344	Bank of America, N.A.	333 South Hope Street Los Angeles, CA 90071	Marilyn Thomas 213-621-4944 marilyn.thomas@baml.com	Residential Funding Company, LLC	Custodial
434	1235343349	Bank of America, N.A.	333 South Hope Street Los Angeles, CA 90071	Marilyn Thomas 213-621-4944 marilyn.thomas@baml.com	Residential Funding Company, LLC	Custodial
435	1235343363	Bank of America, N.A.	333 South Hope Street Los Angeles, CA 90071	Marilyn Thomas 213-621-4944 marilyn.thomas@baml.com	Residential Funding Company, LLC	Custodial
436	1235343368	Bank of America, N.A.	333 South Hope Street Los Angeles, CA 90071	Marilyn Thomas 213-621-4944 marilyn.thomas@baml.com	Residential Funding Company, LLC	Custodial
437	1235343382	Bank of America, N.A.	333 South Hope Street Los Angeles, CA 90071	Marilyn Thomas 213-621-4944 marilyn.thomas@baml.com	Residential Funding Company, LLC	Custodial
438	1235343400	Bank of America, N.A.	333 South Hope Street Los Angeles, CA 90071	Marilyn Thomas 213-621-4944 marilyn.thomas@baml.com	Residential Funding Company, LLC	Custodial
439	1235343405	Bank of America, N.A.	333 South Hope Street Los Angeles, CA 90071	Marilyn Thomas 213-621-4944 marilyn.thomas@baml.com	Residential Funding Company, LLC	Custodial
440	1235343424	Bank of America, N.A.	333 South Hope Street Los Angeles, CA 90071	Marilyn Thomas 213-621-4944 marilyn.thomas@baml.com	Residential Funding Company, LLC	Custodial
441	1235343429	Bank of America, N.A.	333 South Hope Street Los Angeles, CA 90071	Marilyn Thomas 213-621-4944 marilyn.thomas@baml.com	Residential Funding Company, LLC	Custodial
442	1235343443	Bank of America, N.A.	333 South Hope Street Los Angeles, CA 90071	Marilyn Thomas 213-621-4944 marilyn.thomas@baml.com	Residential Funding Company, LLC	Custodial
443	1235343561	Bank of America, N.A.	333 South Hope Street Los Angeles, CA 90071	Marilyn Thomas 213-621-4944 marilyn.thomas@baml.com	Residential Funding Company, LLC	Custodial
444	1235343566	Bank of America, N.A.	333 South Hope Street Los Angeles, CA 90071	Marilyn Thomas 213-621-4944 marilyn.thomas@baml.com	Residential Funding Company, LLC	Custodial
445	1235343580	Bank of America, N.A.	333 South Hope Street Los Angeles, CA 90071	Marilyn Thomas 213-621-4944 marilyn.thomas@baml.com	Residential Funding Company, LLC	Custodial
446	1235343585	Bank of America, N.A.	333 South Hope Street Los Angeles, CA 90071	Marilyn Thomas 213-621-4944 marilyn.thomas@baml.com	Residential Funding Company, LLC	Custodial
447	1235343603	Bank of America, N.A.	333 South Hope Street Los Angeles, CA 90071	Marilyn Thomas 213-621-4944 marilyn.thomas@baml.com	Residential Funding Company, LLC	Custodial
448	1235343608	Bank of America, N.A.	333 South Hope Street Los Angeles, CA 90071	Marilyn Thomas 213-621-4944 marilyn.thomas@baml.com	Residential Funding Company, LLC	Custodial
449	1235343622	Bank of America, N.A.	333 South Hope Street Los Angeles, CA 90071	Marilyn Thomas 213-621-4944 marilyn.thomas@baml.com	Residential Funding Company, LLC	Custodial
450	1235343627	Bank of America, N.A.	333 South Hope Street Los Angeles, CA 90071	Marilyn Thomas 213-621-4944 marilyn.thomas@baml.com	Residential Funding Company, LLC	Custodial
451	1235343641	Bank of America, N.A.	333 South Hope Street Los Angeles, CA 90071	Marilyn Thomas 213-621-4944 marilyn.thomas@baml.com	Residential Funding Company, LLC	Custodial
452	1235343646	Bank of America, N.A.	333 South Hope Street Los Angeles, CA 90071	Marilyn Thomas 213-621-4944 marilyn.thomas@baml.com	Residential Funding Company, LLC	Custodial
453	1235343660	Bank of America, N.A.	333 South Hope Street Los Angeles, CA 90071	Marilyn Thomas 213-621-4944 marilyn.thomas@baml.com	Residential Funding Company, LLC	Custodial
454	1235343665	Bank of America, N.A.	333 South Hope Street Los Angeles, CA 90071	Marilyn Thomas 213-621-4944 marilyn.thomas@baml.com	Residential Funding Company, LLC	Custodial
455	1235343684	Bank of America, N.A.	333 South Hope Street Los Angeles, CA 90071	Marilyn Thomas 213-621-4944 marilyn.thomas@baml.com	Residential Funding Company, LLC	Custodial
456	1235343689	Bank of America, N.A.	333 South Hope Street Los Angeles, CA 90071	Marilyn Thomas 213-621-4944 marilyn.thomas@baml.com	Residential Funding Company, LLC	Custodial
457	1235343702	Bank of America, N.A.	333 South Hope Street Los Angeles, CA 90071	Marilyn Thomas 213-621-4944 marilyn.thomas@baml.com	Residential Funding Company, LLC	Custodial
458	1235343707	Bank of America, N.A.	333 South Hope Street Los Angeles, CA 90071	Marilyn Thomas 213-621-4944 marilyn.thomas@baml.com	Residential Funding Company, LLC	Custodial
459	1235343721	Bank of America, N.A.	333 South Hope Street Los Angeles, CA 90071	Marilyn Thomas 213-621-4944 marilyn.thomas@baml.com	Residential Funding Company, LLC	Custodial
460	1235343726	Bank of America, N.A.	333 South Hope Street Los Angeles, CA 90071	Marilyn Thomas 213-621-4944 marilyn.thomas@baml.com	Residential Funding Company, LLC	Custodial
461	1235343740	Bank of America, N.A.	333 South Hope Street Los Angeles, CA 90071	Marilyn Thomas 213-621-4944 marilyn.thomas@baml.com	Residential Funding Company, LLC	Custodial
462	1235343745	Bank of America, N.A.	333 South Hope Street Los Angeles, CA 90071	Marilyn Thomas 213-621-4944 marilyn.thomas@baml.com	Residential Funding Company, LLC	Custodial
463	1235343764	Bank of America, N.A.	333 South Hope Street Los Angeles, CA 90071	Marilyn Thomas 213-621-4944 marilyn.thomas@baml.com	Residential Funding Company, LLC	Custodial
464	1235343769	Bank of America, N.A.	333 South Hope Street Los Angeles, CA 90071	Marilyn Thomas 213-621-4944 marilyn.thomas@baml.com	Residential Funding Company, LLC	Custodial
465	1235343783	Bank of America, N.A.	333 South Hope Street Los Angeles, CA 90071	Marilyn Thomas 213-621-4944 marilyn.thomas@baml.com	Residential Funding Company, LLC	Custodial
466	1235343788	Bank of America, N.A.	333 South Hope Street Los Angeles, CA 90071	Marilyn Thomas 213-621-4944 marilyn.thomas@baml.com	Residential Funding Company, LLC	Custodial
467	1235343801	Bank of America, N.A.	333 South Hope Street Los Angeles, CA 90071	Marilyn Thomas 213-621-4944 marilyn.thomas@baml.com	Residential Funding Company, LLC	Custodial
468	1235343806	Bank of America, N.A.	333 South Hope Street Los Angeles, CA 90071	Marilyn Thomas 213-621-4944 marilyn.thomas@baml.com	Residential Funding Company, LLC	Custodial
469	1235343820	Bank of America, N.A.	333 South Hope Street Los Angeles, CA 90071	Marilyn Thomas 213-621-4944 marilyn.thomas@baml.com	Residential Funding Company, LLC	Custodial
470	1235343825	Bank of America, N.A.	333 South Hope Street Los Angeles, CA 90071	Marilyn Thomas 213-621-4944 marilyn.thomas@baml.com	Residential Funding Company, LLC	Custodial
471	1235343844	Bank of America, N.A.	333 South Hope Street Los Angeles, CA 90071	Marilyn Thomas 213-621-4944 marilyn.thomas@baml.com	Residential Funding Company, LLC	Custodial
472	1235343849	Bank of America, N.A.	333 South Hope Street Los Angeles, CA 90071	Marilyn Thomas 213-621-4944 marilyn.thomas@baml.com	Residential Funding Company, LLC	Custodial
473	1235343863	Bank of America, N.A.	333 South Hope Street Los Angeles, CA 90071	Marilyn Thomas 213-621-4944 marilyn.thomas@baml.com	Residential Funding Company, LLC	Custodial

Privileged and Confidential

Exhibit B - Bank Accounts

Ref #	Account Number	Bank	Address	Contact	Corporate/Company Code	Account Type
474	1235343868	Bank of America, N.A.	333 South Hope Street Los Angeles, CA 90071	Marilyn Thomas 213-621-4944 marilyn.thomas@baml.com	Residential Funding Company, LLC	Custodial
475	1235343882	Bank of America, N.A.	333 South Hope Street Los Angeles, CA 90071	Marilyn Thomas 213-621-4944 marilyn.thomas@baml.com	Residential Funding Company, LLC	Custodial
476	1235343887	Bank of America, N.A.	333 South Hope Street Los Angeles, CA 90071	Marilyn Thomas 213-621-4944 marilyn.thomas@baml.com	Residential Funding Company, LLC	Custodial
477	1235343900	Bank of America, N.A.	333 South Hope Street Los Angeles, CA 90071	Marilyn Thomas 213-621-4944 marilyn.thomas@baml.com	Residential Funding Company, LLC	Custodial
478	1235343905	Bank of America, N.A.	333 South Hope Street Los Angeles, CA 90071	Marilyn Thomas 213-621-4944 marilyn.thomas@baml.com	Residential Funding Company, LLC	Custodial
479	1235343924	Bank of America, N.A.	333 South Hope Street Los Angeles, CA 90071	Marilyn Thomas 213-621-4944 marilyn.thomas@baml.com	Residential Funding Company, LLC	Custodial
480	1235343929	Bank of America, N.A.	333 South Hope Street Los Angeles, CA 90071	Marilyn Thomas 213-621-4944 marilyn.thomas@baml.com	Residential Funding Company, LLC	Custodial
481	1235343943	Bank of America, N.A.	333 South Hope Street Los Angeles, CA 90071	Marilyn Thomas 213-621-4944 marilyn.thomas@baml.com	Residential Funding Company, LLC	Custodial
482	1235343948	Bank of America, N.A.	333 South Hope Street Los Angeles, CA 90071	Marilyn Thomas 213-621-4944 marilyn.thomas@baml.com	Residential Funding Company, LLC	Custodial
483	1235343962	Bank of America, N.A.	333 South Hope Street Los Angeles, CA 90071	Marilyn Thomas 213-621-4944 marilyn.thomas@baml.com	Residential Funding Company, LLC	Custodial
484	1235343967	Bank of America, N.A.	333 South Hope Street Los Angeles, CA 90071	Marilyn Thomas 213-621-4944 marilyn.thomas@baml.com	Residential Funding Company, LLC	Custodial
485	1235343981	Bank of America, N.A.	333 South Hope Street Los Angeles, CA 90071	Marilyn Thomas 213-621-4944 marilyn.thomas@baml.com	Residential Funding Company, LLC	Custodial
486	1235343986	Bank of America, N.A.	333 South Hope Street Los Angeles, CA 90071	Marilyn Thomas 213-621-4944 marilyn.thomas@baml.com	Residential Funding Company, LLC	Custodial
487	1235344013	Bank of America, N.A.	333 South Hope Street Los Angeles, CA 90071	Marilyn Thomas 213-621-4944 marilyn.thomas@baml.com	Residential Funding Company, LLC	Custodial
488	1235344018	Bank of America, N.A.	333 South Hope Street Los Angeles, CA 90071	Marilyn Thomas 213-621-4944 marilyn.thomas@baml.com	Residential Funding Company, LLC	Custodial
489	1235344032	Bank of America, N.A.	333 South Hope Street Los Angeles, CA 90071	Marilyn Thomas 213-621-4944 marilyn.thomas@baml.com	Residential Funding Company, LLC	Custodial
490	1235344037	Bank of America, N.A.	333 South Hope Street Los Angeles, CA 90071	Marilyn Thomas 213-621-4944 marilyn.thomas@baml.com	Residential Funding Company, LLC	Custodial
491	1235344051	Bank of America, N.A.	333 South Hope Street Los Angeles, CA 90071	Marilyn Thomas 213-621-4944 marilyn.thomas@baml.com	Residential Funding Company, LLC	Custodial
492	1235344056	Bank of America, N.A.	333 South Hope Street Los Angeles, CA 90071	Marilyn Thomas 213-621-4944 marilyn.thomas@baml.com	Residential Funding Company, LLC	Custodial
493	1235344070	Bank of America, N.A.	333 South Hope Street Los Angeles, CA 90071	Marilyn Thomas 213-621-4944 marilyn.thomas@baml.com	Residential Funding Company, LLC	Custodial
494	1235344075	Bank of America, N.A.	333 South Hope Street Los Angeles, CA 90071	Marilyn Thomas 213-621-4944 marilyn.thomas@baml.com	Residential Funding Company, LLC	Custodial
495	1235344094	Bank of America, N.A.	333 South Hope Street Los Angeles, CA 90071	Marilyn Thomas 213-621-4944 marilyn.thomas@baml.com	Residential Funding Company, LLC	Custodial
496	1235344099	Bank of America, N.A.	333 South Hope Street Los Angeles, CA 90071	Marilyn Thomas 213-621-4944 marilyn.thomas@baml.com	Residential Funding Company, LLC	Custodial
497	1235344112	Bank of America, N.A.	333 South Hope Street Los Angeles, CA 90071	Marilyn Thomas 213-621-4944 marilyn.thomas@baml.com	Residential Funding Company, LLC	Custodial
498	1235344117	Bank of America, N.A.	333 South Hope Street Los Angeles, CA 90071	Marilyn Thomas 213-621-4944 marilyn.thomas@baml.com	Residential Funding Company, LLC	Custodial
499	1235344131	Bank of America, N.A.	333 South Hope Street Los Angeles, CA 90071	Marilyn Thomas 213-621-4944 marilyn.thomas@baml.com	Residential Funding Company, LLC	Custodial
500	1235344136	Bank of America, N.A.	333 South Hope Street Los Angeles, CA 90071	Marilyn Thomas 213-621-4944 marilyn.thomas@baml.com	Residential Funding Company, LLC	Custodial
501	1235344150	Bank of America, N.A.	333 South Hope Street Los Angeles, CA 90071	Marilyn Thomas 213-621-4944 marilyn.thomas@baml.com	Residential Funding Company, LLC	Custodial
502	1235344155	Bank of America, N.A.	333 South Hope Street Los Angeles, CA 90071	Marilyn Thomas 213-621-4944 marilyn.thomas@baml.com	Residential Funding Company, LLC	Custodial
503	1235344174	Bank of America, N.A.	333 South Hope Street Los Angeles, CA 90071	Marilyn Thomas 213-621-4944 marilyn.thomas@baml.com	Residential Funding Company, LLC	Custodial
504	1235344179	Bank of America, N.A.	333 South Hope Street Los Angeles, CA 90071	Marilyn Thomas 213-621-4944 marilyn.thomas@baml.com	Residential Funding Company, LLC	Custodial
505	1235344216	Bank of America, N.A.	333 South Hope Street Los Angeles, CA 90071	Marilyn Thomas 213-621-4944 marilyn.thomas@baml.com	Residential Funding Company, LLC	Custodial
506	1235344230	Bank of America, N.A.	333 South Hope Street Los Angeles, CA 90071	Marilyn Thomas 213-621-4944 marilyn.thomas@baml.com	Residential Funding Company, LLC	Custodial
507	1235344235	Bank of America, N.A.	333 South Hope Street Los Angeles, CA 90071	Marilyn Thomas 213-621-4944 marilyn.thomas@baml.com	Residential Funding Company, LLC	Custodial
508	1235344254	Bank of America, N.A.	333 South Hope Street Los Angeles, CA 90071	Marilyn Thomas 213-621-4944 marilyn.thomas@baml.com	Residential Funding Company, LLC	Custodial
509	1235344259	Bank of America, N.A.	333 South Hope Street Los Angeles, CA 90071	Marilyn Thomas 213-621-4944 marilyn.thomas@baml.com	Residential Funding Company, LLC	Custodial
510	1235344273	Bank of America, N.A.	333 South Hope Street Los Angeles, CA 90071	Marilyn Thomas 213-621-4944 marilyn.thomas@baml.com	Residential Funding Company, LLC	Custodial
511	1235344278	Bank of America, N.A.	333 South Hope Street Los Angeles, CA 90071	Marilyn Thomas 213-621-4944 marilyn.thomas@baml.com	Residential Funding Company, LLC	Custodial
512	1235344315	Bank of America, N.A.	333 South Hope Street Los Angeles, CA 90071	Marilyn Thomas 213-621-4944 marilyn.thomas@baml.com	Residential Funding Company, LLC	Custodial
513	1235344334	Bank of America, N.A.	333 South Hope Street Los Angeles, CA 90071	Marilyn Thomas 213-621-4944 marilyn.thomas@baml.com	Residential Funding Company, LLC	Custodial
514	1235344339	Bank of America, N.A.	333 South Hope Street Los Angeles, CA 90071	Marilyn Thomas 213-621-4944 marilyn.thomas@baml.com	Residential Funding Company, LLC	Custodial
515	1235344353	Bank of America, N.A.	333 South Hope Street Los Angeles, CA 90071	Marilyn Thomas 213-621-4944 marilyn.thomas@baml.com	Residential Funding Company, LLC	Custodial
516	1235344358	Bank of America, N.A.	333 South Hope Street Los Angeles, CA 90071	Marilyn Thomas 213-621-4944 marilyn.thomas@baml.com	Residential Funding Company, LLC	Custodial

Privileged and Confidential

Exhibit B - Bank Accounts

Ref #	Account Number	Bank	Address	Contact	Corporate/Company Code	Account Type
517	1235344372	Bank of America, N.A.	333 South Hope Street Los Angeles, CA 90071	Marilyn Thomas 213-621-4944 marilyn.thomas@baml.com	Residential Funding Company, LLC	Custodial
518	1235344377	Bank of America, N.A.	333 South Hope Street Los Angeles, CA 90071	Marilyn Thomas 213-621-4944 marilyn.thomas@baml.com	Residential Funding Company, LLC	Custodial
519	1235344414	Bank of America, N.A.	333 South Hope Street Los Angeles, CA 90071	Marilyn Thomas 213-621-4944 marilyn.thomas@baml.com	Residential Funding Company, LLC	Custodial
520	1235344419	Bank of America, N.A.	333 South Hope Street Los Angeles, CA 90071	Marilyn Thomas 213-621-4944 marilyn.thomas@baml.com	Residential Funding Company, LLC	Custodial
521	1235344433	Bank of America, N.A.	333 South Hope Street Los Angeles, CA 90071	Marilyn Thomas 213-621-4944 marilyn.thomas@baml.com	Residential Funding Company, LLC	Custodial
522	1235344438	Bank of America, N.A.	333 South Hope Street Los Angeles, CA 90071	Marilyn Thomas 213-621-4944 marilyn.thomas@baml.com	Residential Funding Company, LLC	Custodial
523	1235344452	Bank of America, N.A.	333 South Hope Street Los Angeles, CA 90071	Marilyn Thomas 213-621-4944 marilyn.thomas@baml.com	Residential Funding Company, LLC	Custodial
524	1235344457	Bank of America, N.A.	333 South Hope Street Los Angeles, CA 90071	Marilyn Thomas 213-621-4944 marilyn.thomas@baml.com	Residential Funding Company, LLC	Custodial
525	1235344471	Bank of America, N.A.	333 South Hope Street Los Angeles, CA 90071	Marilyn Thomas 213-621-4944 marilyn.thomas@baml.com	Residential Funding Company, LLC	Custodial
526	1235344513	Bank of America, N.A.	333 South Hope Street Los Angeles, CA 90071	Marilyn Thomas 213-621-4944 marilyn.thomas@baml.com	Residential Funding Company, LLC	Custodial
527	1235344518	Bank of America, N.A.	333 South Hope Street Los Angeles, CA 90071	Marilyn Thomas 213-621-4944 marilyn.thomas@baml.com	Residential Funding Company, LLC	Custodial
528	1235344532	Bank of America, N.A.	333 South Hope Street Los Angeles, CA 90071	Marilyn Thomas 213-621-4944 marilyn.thomas@baml.com	Residential Funding Company, LLC	Custodial
529	1235344537	Bank of America, N.A.	333 South Hope Street Los Angeles, CA 90071	Marilyn Thomas 213-621-4944 marilyn.thomas@baml.com	Residential Funding Company, LLC	Custodial
530	1235344551	Bank of America, N.A.	333 South Hope Street Los Angeles, CA 90071	Marilyn Thomas 213-621-4944 marilyn.thomas@baml.com	Residential Funding Company, LLC	Custodial
531	1235344556	Bank of America, N.A.	333 South Hope Street Los Angeles, CA 90071	Marilyn Thomas 213-621-4944 marilyn.thomas@baml.com	Residential Funding Company, LLC	Custodial
532	1235344594	Bank of America, N.A.	333 South Hope Street Los Angeles, CA 90071	Marilyn Thomas 213-621-4944 marilyn.thomas@baml.com	Residential Funding Company, LLC	Custodial
533	1235344599	Bank of America, N.A.	333 South Hope Street Los Angeles, CA 90071	Marilyn Thomas 213-621-4944 marilyn.thomas@baml.com	Residential Funding Company, LLC	Custodial
534	1235344612	Bank of America, N.A.	333 South Hope Street Los Angeles, CA 90071	Marilyn Thomas 213-621-4944 marilyn.thomas@baml.com	Residential Funding Company, LLC	Custodial
535	1235344617	Bank of America, N.A.	333 South Hope Street Los Angeles, CA 90071	Marilyn Thomas 213-621-4944 marilyn.thomas@baml.com	Residential Funding Company, LLC	Custodial
536	1235344631	Bank of America, N.A.	333 South Hope Street Los Angeles, CA 90071	Marilyn Thomas 213-621-4944 marilyn.thomas@baml.com	Residential Funding Company, LLC	Custodial
537	1235344636	Bank of America, N.A.	333 South Hope Street Los Angeles, CA 90071	Marilyn Thomas 213-621-4944 marilyn.thomas@baml.com	Residential Funding Company, LLC	Custodial
538	1235344650	Bank of America, N.A.	333 South Hope Street Los Angeles, CA 90071	Marilyn Thomas 213-621-4944 marilyn.thomas@baml.com	Residential Funding Company, LLC	Custodial
539	1235344655	Bank of America, N.A.	333 South Hope Street Los Angeles, CA 90071	Marilyn Thomas 213-621-4944 marilyn.thomas@baml.com	Residential Funding Company, LLC	Custodial
540	1235344674	Bank of America, N.A.	333 South Hope Street Los Angeles, CA 90071	Marilyn Thomas 213-621-4944 marilyn.thomas@baml.com	Residential Funding Company, LLC	Custodial
541	1235344679	Bank of America, N.A.	333 South Hope Street Los Angeles, CA 90071	Marilyn Thomas 213-621-4944 marilyn.thomas@baml.com	Residential Funding Company, LLC	Custodial
542	1235344693	Bank of America, N.A.	333 South Hope Street Los Angeles, CA 90071	Marilyn Thomas 213-621-4944 marilyn.thomas@baml.com	Residential Funding Company, LLC	Custodial
543	1235344698	Bank of America, N.A.	333 South Hope Street Los Angeles, CA 90071	Marilyn Thomas 213-621-4944 marilyn.thomas@baml.com	Residential Funding Company, LLC	Custodial
544	1235344711	Bank of America, N.A.	333 South Hope Street Los Angeles, CA 90071	Marilyn Thomas 213-621-4944 marilyn.thomas@baml.com	Residential Funding Company, LLC	Custodial
545	1235344716	Bank of America, N.A.	333 South Hope Street Los Angeles, CA 90071	Marilyn Thomas 213-621-4944 marilyn.thomas@baml.com	Residential Funding Company, LLC	Custodial
546	1235344730	Bank of America, N.A.	333 South Hope Street Los Angeles, CA 90071	Marilyn Thomas 213-621-4944 marilyn.thomas@baml.com	Residential Funding Company, LLC	Custodial
547	1235344735	Bank of America, N.A.	333 South Hope Street Los Angeles, CA 90071	Marilyn Thomas 213-621-4944 marilyn.thomas@baml.com	Residential Funding Company, LLC	Custodial
548	1235344754	Bank of America, N.A.	333 South Hope Street Los Angeles, CA 90071	Marilyn Thomas 213-621-4944 marilyn.thomas@baml.com	Residential Funding Company, LLC	Custodial
549	1235344759	Bank of America, N.A.	333 South Hope Street Los Angeles, CA 90071	Marilyn Thomas 213-621-4944 marilyn.thomas@baml.com	Residential Funding Company, LLC	Custodial
550	1235344792	Bank of America, N.A.	333 South Hope Street Los Angeles, CA 90071	Marilyn Thomas 213-621-4944 marilyn.thomas@baml.com	Residential Funding Company, LLC	Custodial
551	1235344797	Bank of America, N.A.	333 South Hope Street Los Angeles, CA 90071	Marilyn Thomas 213-621-4944 marilyn.thomas@baml.com	Residential Funding Company, LLC	Custodial
552	1235344810	Bank of America, N.A.	333 South Hope Street Los Angeles, CA 90071	Marilyn Thomas 213-621-4944 marilyn.thomas@baml.com	Residential Funding Company, LLC	Custodial
553	1235344815	Bank of America, N.A.	333 South Hope Street Los Angeles, CA 90071	Marilyn Thomas 213-621-4944 marilyn.thomas@baml.com	Residential Funding Company, LLC	Custodial
554	1235344834	Bank of America, N.A.	333 South Hope Street Los Angeles, CA 90071	Marilyn Thomas 213-621-4944 marilyn.thomas@baml.com	Residential Funding Company, LLC	Custodial
555	1235344839	Bank of America, N.A.	333 South Hope Street Los Angeles, CA 90071	Marilyn Thomas 213-621-4944 marilyn.thomas@baml.com	Residential Funding Company, LLC	Custodial
556	1235344853	Bank of America, N.A.	333 South Hope Street Los Angeles, CA 90071	Marilyn Thomas 213-621-4944 marilyn.thomas@baml.com	Residential Funding Company, LLC	Custodial
557	1235344858	Bank of America, N.A.	333 South Hope Street Los Angeles, CA 90071	Marilyn Thomas 213-621-4944 marilyn.thomas@baml.com	Residential Funding Company, LLC	Custodial
558	1235344891	Bank of America, N.A.	333 South Hope Street Los Angeles, CA 90071	Marilyn Thomas 213-621-4944 marilyn.thomas@baml.com	Residential Funding Company, LLC	Custodial
559	1235344896	Bank of America, N.A.	333 South Hope Street Los Angeles, CA 90071	Marilyn Thomas 213-621-4944 marilyn.thomas@baml.com	Residential Funding Company, LLC	Custodial

Privileged and Confidential

Exhibit B - Bank Accounts

Ref #	Account Number	Bank	Address	Contact	Corporate/Company Code	Account Type
560	1235344914	Bank of America, N.A.	333 South Hope Street Los Angeles, CA 90071	Marilyn Thomas 213-621-4944 marilyn.thomas@baml.com	Residential Funding Company, LLC	Custodial
561	1235344919	Bank of America, N.A.	333 South Hope Street Los Angeles, CA 90071	Marilyn Thomas 213-621-4944 marilyn.thomas@baml.com	Residential Funding Company, LLC	Custodial
562	1235344933	Bank of America, N.A.	333 South Hope Street Los Angeles, CA 90071	Marilyn Thomas 213-621-4944 marilyn.thomas@baml.com	Residential Funding Company, LLC	Custodial
563	1235344938	Bank of America, N.A.	333 South Hope Street Los Angeles, CA 90071	Marilyn Thomas 213-621-4944 marilyn.thomas@baml.com	Residential Funding Company, LLC	Custodial
564	1235344952	Bank of America, N.A.	333 South Hope Street Los Angeles, CA 90071	Marilyn Thomas 213-621-4944 marilyn.thomas@baml.com	Residential Funding Company, LLC	Custodial
565	1235344957	Bank of America, N.A.	333 South Hope Street Los Angeles, CA 90071	Marilyn Thomas 213-621-4944 marilyn.thomas@baml.com	Residential Funding Company, LLC	Custodial
566	1235344990	Bank of America, N.A.	333 South Hope Street Los Angeles, CA 90071	Marilyn Thomas 213-621-4944 marilyn.thomas@baml.com	Residential Funding Company, LLC	Custodial
567	1235344995	Bank of America, N.A.	333 South Hope Street Los Angeles, CA 90071	Marilyn Thomas 213-621-4944 marilyn.thomas@baml.com	Residential Funding Company, LLC	Custodial
568	1235345003	Bank of America, N.A.	333 South Hope Street Los Angeles, CA 90071	Marilyn Thomas 213-621-4944 marilyn.thomas@baml.com	Residential Funding Company, LLC	Custodial
569	1235345008	Bank of America, N.A.	333 South Hope Street Los Angeles, CA 90071	Marilyn Thomas 213-621-4944 marilyn.thomas@baml.com	Residential Funding Company, LLC	Custodial
570	1235345022	Bank of America, N.A.	333 South Hope Street Los Angeles, CA 90071	Marilyn Thomas 213-621-4944 marilyn.thomas@baml.com	Residential Funding Company, LLC	Custodial
571	1235345027	Bank of America, N.A.	333 South Hope Street Los Angeles, CA 90071	Marilyn Thomas 213-621-4944 marilyn.thomas@baml.com	Residential Funding Company, LLC	Custodial
572	1235345041	Bank of America, N.A.	333 South Hope Street Los Angeles, CA 90071	Marilyn Thomas 213-621-4944 marilyn.thomas@baml.com	Residential Funding Company, LLC	Custodial
573	1235345164	Bank of America, N.A.	333 South Hope Street Los Angeles, CA 90071	Marilyn Thomas 213-621-4944 marilyn.thomas@baml.com	Residential Funding Company, LLC	Custodial
574	1235345169	Bank of America, N.A.	333 South Hope Street Los Angeles, CA 90071	Marilyn Thomas 213-621-4944 marilyn.thomas@baml.com	Residential Funding Company, LLC	Custodial
575	1235345183	Bank of America, N.A.	333 South Hope Street Los Angeles, CA 90071	Marilyn Thomas 213-621-4944 marilyn.thomas@baml.com	Residential Funding Company, LLC	Custodial
576	1235345188	Bank of America, N.A.	333 South Hope Street Los Angeles, CA 90071	Marilyn Thomas 213-621-4944 marilyn.thomas@baml.com	Residential Funding Company, LLC	Custodial
577	1235345201	Bank of America, N.A.	333 South Hope Street Los Angeles, CA 90071	Marilyn Thomas 213-621-4944 marilyn.thomas@baml.com	Residential Funding Company, LLC	Custodial
578	1235345206	Bank of America, N.A.	333 South Hope Street Los Angeles, CA 90071	Marilyn Thomas 213-621-4944 marilyn.thomas@baml.com	Residential Funding Company, LLC	Custodial
579	1235345220	Bank of America, N.A.	333 South Hope Street Los Angeles, CA 90071	Marilyn Thomas 213-621-4944 marilyn.thomas@baml.com	Residential Funding Company, LLC	Custodial
580	1235345225	Bank of America, N.A.	333 South Hope Street Los Angeles, CA 90071	Marilyn Thomas 213-621-4944 marilyn.thomas@baml.com	Residential Funding Company, LLC	Custodial
581	1235345244	Bank of America, N.A.	333 South Hope Street Los Angeles, CA 90071	Marilyn Thomas 213-621-4944 marilyn.thomas@baml.com	Residential Funding Company, LLC	Custodial
582	1235345249	Bank of America, N.A.	333 South Hope Street Los Angeles, CA 90071	Marilyn Thomas 213-621-4944 marilyn.thomas@baml.com	Residential Funding Company, LLC	Custodial
583	1235345263	Bank of America, N.A.	333 South Hope Street Los Angeles, CA 90071	Marilyn Thomas 213-621-4944 marilyn.thomas@baml.com	Residential Funding Company, LLC	Custodial
584	1235345268	Bank of America, N.A.	333 South Hope Street Los Angeles, CA 90071	Marilyn Thomas 213-621-4944 marilyn.thomas@baml.com	Residential Funding Company, LLC	Custodial
585	1235345282	Bank of America, N.A.	333 South Hope Street Los Angeles, CA 90071	Marilyn Thomas 213-621-4944 marilyn.thomas@baml.com	Residential Funding Company, LLC	Custodial
586	1235345287	Bank of America, N.A.	333 South Hope Street Los Angeles, CA 90071	Marilyn Thomas 213-621-4944 marilyn.thomas@baml.com	Residential Funding Company, LLC	Custodial
587	1235345300	Bank of America, N.A.	333 South Hope Street Los Angeles, CA 90071	Marilyn Thomas 213-621-4944 marilyn.thomas@baml.com	Residential Funding Company, LLC	Custodial
588	1235345305	Bank of America, N.A.	333 South Hope Street Los Angeles, CA 90071	Marilyn Thomas 213-621-4944 marilyn.thomas@baml.com	Residential Funding Company, LLC	Custodial
589	1235345324	Bank of America, N.A.	333 South Hope Street Los Angeles, CA 90071	Marilyn Thomas 213-621-4944 marilyn.thomas@baml.com	Residential Funding Company, LLC	Custodial
590	1235345329	Bank of America, N.A.	333 South Hope Street Los Angeles, CA 90071	Marilyn Thomas 213-621-4944 marilyn.thomas@baml.com	Residential Funding Company, LLC	Custodial
591	1235345343	Bank of America, N.A.	333 South Hope Street Los Angeles, CA 90071	Marilyn Thomas 213-621-4944 marilyn.thomas@baml.com	Residential Funding Company, LLC	Custodial
592	1235345348	Bank of America, N.A.	333 South Hope Street Los Angeles, CA 90071	Marilyn Thomas 213-621-4944 marilyn.thomas@baml.com	Residential Funding Company, LLC	Custodial
593	1235345362	Bank of America, N.A.	333 South Hope Street Los Angeles, CA 90071	Marilyn Thomas 213-621-4944 marilyn.thomas@baml.com	Residential Funding Company, LLC	Custodial
594	1235345367	Bank of America, N.A.	333 South Hope Street Los Angeles, CA 90071	Marilyn Thomas 213-621-4944 marilyn.thomas@baml.com	Residential Funding Company, LLC	Custodial
595	1235345381	Bank of America, N.A.	333 South Hope Street Los Angeles, CA 90071	Marilyn Thomas 213-621-4944 marilyn.thomas@baml.com	Residential Funding Company, LLC	Custodial
596	1235345386	Bank of America, N.A.	333 South Hope Street Los Angeles, CA 90071	Marilyn Thomas 213-621-4944 marilyn.thomas@baml.com	Residential Funding Company, LLC	Custodial
597	1235345404	Bank of America, N.A.	333 South Hope Street Los Angeles, CA 90071	Marilyn Thomas 213-621-4944 marilyn.thomas@baml.com	Residential Funding Company, LLC	Custodial
598	1235345409	Bank of America, N.A.	333 South Hope Street Los Angeles, CA 90071	Marilyn Thomas 213-621-4944 marilyn.thomas@baml.com	Residential Funding Company, LLC	Custodial
599	1235345423	Bank of America, N.A.	333 South Hope Street Los Angeles, CA 90071	Marilyn Thomas 213-621-4944 marilyn.thomas@baml.com	Residential Funding Company, LLC	Custodial
600	1235345428	Bank of America, N.A.	333 South Hope Street Los Angeles, CA 90071	Marilyn Thomas 213-621-4944 marilyn.thomas@baml.com	Residential Funding Company, LLC	Custodial
601	1235345442	Bank of America, N.A.	333 South Hope Street Los Angeles, CA 90071	Marilyn Thomas 213-621-4944 marilyn.thomas@baml.com	Residential Funding Company, LLC	Custodial
602	1235345447	Bank of America, N.A.	333 South Hope Street Los Angeles, CA 90071	Marilyn Thomas 213-621-4944 marilyn.thomas@baml.com	Residential Funding Company, LLC	Custodial

Privileged and Confidential

Exhibit B - Bank Accounts

Ref #	Account Number	Bank	Address	Contact	Corporate/Company Code	Account Type
603	1235345461	Bank of America, N.A.	333 South Hope Street Los Angeles, CA 90071	Marilyn Thomas 213-621-4944 marilyn.thomas@baml.com	Residential Funding Company, LLC	Custodial
604	1235345466	Bank of America, N.A.	333 South Hope Street Los Angeles, CA 90071	Marilyn Thomas 213-621-4944 marilyn.thomas@baml.com	Residential Funding Company, LLC	Custodial
605	1235345485	Bank of America, N.A.	333 South Hope Street Los Angeles, CA 90071	Marilyn Thomas 213-621-4944 marilyn.thomas@baml.com	Residential Funding Company, LLC	Custodial
606	1235378556	Bank of America, N.A.	333 South Hope Street Los Angeles, CA 90071	Marilyn Thomas 213-621-4944 marilyn.thomas@baml.com	GMAC Mortgage, LLC	Custodial
607	1235441972	Bank of America, N.A.	333 South Hope Street Los Angeles, CA 90071	Marilyn Thomas 213-621-4944 marilyn.thomas@baml.com	Residential Funding Company, LLC	Custodial
608	1235469131	Bank of America, N.A.	333 South Hope Street Los Angeles, CA 90071	Marilyn Thomas 213-621-4944 marilyn.thomas@baml.com	Residential Capital, LLC	Operating - Concentration
609	1235522237	Bank of America, N.A.	333 South Hope Street Los Angeles, CA 90071	Marilyn Thomas 213-621-4944 marilyn.thomas@baml.com	GMAC Mortgage, LLC	Custodial
610	1235540397	Bank of America, N.A.	333 South Hope Street Los Angeles, CA 90071	Marilyn Thomas 213-621-4944 marilyn.thomas@baml.com	Residential Funding Company, LLC	Custodial
611	1235540410	Bank of America, N.A.	333 South Hope Street Los Angeles, CA 90071	Marilyn Thomas 213-621-4944 marilyn.thomas@baml.com	Residential Funding Company, LLC	Custodial
612	1235540415	Bank of America, N.A.	333 South Hope Street Los Angeles, CA 90071	Marilyn Thomas 213-621-4944 marilyn.thomas@baml.com	Residential Funding Company, LLC	Custodial
613	1235545144	Bank of America, N.A.	333 South Hope Street Los Angeles, CA 90071	Marilyn Thomas 213-621-4944 marilyn.thomas@baml.com	Residential Funding Company, LLC	Custodial
614	1235545149	Bank of America, N.A.	333 South Hope Street Los Angeles, CA 90071	Marilyn Thomas 213-621-4944 marilyn.thomas@baml.com	Residential Funding Company, LLC	Custodial
615	1235545163	Bank of America, N.A.	333 South Hope Street Los Angeles, CA 90071	Marilyn Thomas 213-621-4944 marilyn.thomas@baml.com	Residential Funding Company, LLC	Custodial
616	1235593782	Bank of America, N.A.	333 South Hope Street Los Angeles, CA 90071	Marilyn Thomas 213-621-4944 marilyn.thomas@baml.com	GMAC Mortgage, LLC	Custodial
617	1235593787	Bank of America, N.A.	333 South Hope Street Los Angeles, CA 90071	Marilyn Thomas 213-621-4944 marilyn.thomas@baml.com	GMAC Mortgage, LLC	Custodial
618	1235593800	Bank of America, N.A.	333 South Hope Street Los Angeles, CA 90071	Marilyn Thomas 213-621-4944 marilyn.thomas@baml.com	GMAC Mortgage, LLC	Custodial
619	1235593824	Bank of America, N.A.	333 South Hope Street Los Angeles, CA 90071	Marilyn Thomas 213-621-4944 marilyn.thomas@baml.com	GMAC Mortgage, LLC	Custodial
620	1235593829	Bank of America, N.A.	333 South Hope Street Los Angeles, CA 90071	Marilyn Thomas 213-621-4944 marilyn.thomas@baml.com	GMAC Mortgage, LLC	Custodial
621	1235593843	Bank of America, N.A.	333 South Hope Street Los Angeles, CA 90071	Marilyn Thomas 213-621-4944 marilyn.thomas@baml.com	GMAC Mortgage, LLC	Custodial
622	1235593848	Bank of America, N.A.	333 South Hope Street Los Angeles, CA 90071	Marilyn Thomas 213-621-4944 marilyn.thomas@baml.com	GMAC Mortgage, LLC	Custodial
623	1235593862	Bank of America, N.A.	333 South Hope Street Los Angeles, CA 90071	Marilyn Thomas 213-621-4944 marilyn.thomas@baml.com	GMAC Mortgage, LLC	Custodial
624	1235593881	Bank of America, N.A.	333 South Hope Street Los Angeles, CA 90071	Marilyn Thomas 213-621-4944 marilyn.thomas@baml.com	GMAC Mortgage, LLC	Custodial
625	1235593886	Bank of America, N.A.	333 South Hope Street Los Angeles, CA 90071	Marilyn Thomas 213-621-4944 marilyn.thomas@baml.com	GMAC Mortgage, LLC	Custodial
626	1235597129	Bank of America, N.A.	333 South Hope Street Los Angeles, CA 90071	Marilyn Thomas 213-621-4944 marilyn.thomas@baml.com	GMAC Mortgage, LLC	Custodial
627	1235597143	Bank of America, N.A.	333 South Hope Street Los Angeles, CA 90071	Marilyn Thomas 213-621-4944 marilyn.thomas@baml.com	GMAC Mortgage, LLC	Custodial
628	1235597148	Bank of America, N.A.	333 South Hope Street Los Angeles, CA 90071	Marilyn Thomas 213-621-4944 marilyn.thomas@baml.com	GMAC Mortgage, LLC	Custodial
629	1235597162	Bank of America, N.A.	333 South Hope Street Los Angeles, CA 90071	Marilyn Thomas 213-621-4944 marilyn.thomas@baml.com	GMAC Mortgage, LLC	Custodial
630	1235597167	Bank of America, N.A.	333 South Hope Street Los Angeles, CA 90071	Marilyn Thomas 213-621-4944 marilyn.thomas@baml.com	GMAC Mortgage, LLC	Custodial
631	1235597181	Bank of America, N.A.	333 South Hope Street Los Angeles, CA 90071	Marilyn Thomas 213-621-4944 marilyn.thomas@baml.com	GMAC Mortgage, LLC	Custodial
632	1235597186	Bank of America, N.A.	333 South Hope Street Los Angeles, CA 90071	Marilyn Thomas 213-621-4944 marilyn.thomas@baml.com	GMAC Mortgage, LLC	Custodial
633	1235597209	Bank of America, N.A.	333 South Hope Street Los Angeles, CA 90071	Marilyn Thomas 213-621-4944 marilyn.thomas@baml.com	GMAC Mortgage, LLC	Custodial
634	1235597223	Bank of America, N.A.	333 South Hope Street Los Angeles, CA 90071	Marilyn Thomas 213-621-4944 marilyn.thomas@baml.com	GMAC Mortgage, LLC	Custodial
635	1235597228	Bank of America, N.A.	333 South Hope Street Los Angeles, CA 90071	Marilyn Thomas 213-621-4944 marilyn.thomas@baml.com	GMAC Mortgage, LLC	Custodial
636	1235597242	Bank of America, N.A.	333 South Hope Street Los Angeles, CA 90071	Marilyn Thomas 213-621-4944 marilyn.thomas@baml.com	GMAC Mortgage, LLC	Custodial
637	1235597247	Bank of America, N.A.	333 South Hope Street Los Angeles, CA 90071	Marilyn Thomas 213-621-4944 marilyn.thomas@baml.com	GMAC Mortgage, LLC	Custodial
638	1235597261	Bank of America, N.A.	333 South Hope Street Los Angeles, CA 90071	Marilyn Thomas 213-621-4944 marilyn.thomas@baml.com	GMAC Mortgage, LLC	Custodial
639	1235597266	Bank of America, N.A.	333 South Hope Street Los Angeles, CA 90071	Marilyn Thomas 213-621-4944 marilyn.thomas@baml.com	GMAC Mortgage, LLC	Custodial
640	1235597308	Bank of America, N.A.	333 South Hope Street Los Angeles, CA 90071	Marilyn Thomas 213-621-4944 marilyn.thomas@baml.com	GMAC Mortgage, LLC	Custodial
641	1235598133	Bank of America, N.A.	333 South Hope Street Los Angeles, CA 90071	Marilyn Thomas 213-621-4944 marilyn.thomas@baml.com	GMAC Mortgage, LLC	Custodial
642	1235617150	Bank of America, N.A.	333 South Hope Street Los Angeles, CA 90071	Marilyn Thomas 213-621-4944 marilyn.thomas@baml.com	GMAC Residential Holding Company, LLC	Operating - Concentration
643	1235626744	Bank of America, N.A.	333 South Hope Street Los Angeles, CA 90071	Marilyn Thomas 213-621-4944 marilyn.thomas@baml.com	Executive Trustee Services LLC	Non-Operating - Receipt
644	1235642145	Bank of America, N.A.	333 South Hope Street Los Angeles, CA 90071	Marilyn Thomas 213-621-4944 marilyn.thomas@baml.com	Residential Funding Company, LLC	Custodial
645	1235642164	Bank of America, N.A.	333 South Hope Street Los Angeles, CA 90071	Marilyn Thomas 213-621-4944 marilyn.thomas@baml.com	Residential Funding Company, LLC	Custodial

Privileged and Confidential

Exhibit B - Bank Accounts

Ref #	Account Number	Bank	Address	Contact	Corporate/Company Code	Account Type
646	1235642169	Bank of America, N.A.	333 South Hope Street Los Angeles, CA 90071	Marilyn Thomas 213-621-4944 marilyn.thomas@baml.com	Residential Funding Company, LLC	Custodial
647	1235642183	Bank of America, N.A.	333 South Hope Street Los Angeles, CA 90071	Marilyn Thomas 213-621-4944 marilyn.thomas@baml.com	Residential Funding Company, LLC	Custodial
648	1235642188	Bank of America, N.A.	333 South Hope Street Los Angeles, CA 90071	Marilyn Thomas 213-621-4944 marilyn.thomas@baml.com	Residential Funding Company, LLC	Custodial
649	1235642201	Bank of America, N.A.	333 South Hope Street Los Angeles, CA 90071	Marilyn Thomas 213-621-4944 marilyn.thomas@baml.com	Residential Funding Company, LLC	Custodial
650	1235642206	Bank of America, N.A.	333 South Hope Street Los Angeles, CA 90071	Marilyn Thomas 213-621-4944 marilyn.thomas@baml.com	Residential Funding Company, LLC	Custodial
651	1235642220	Bank of America, N.A.	333 South Hope Street Los Angeles, CA 90071	Marilyn Thomas 213-621-4944 marilyn.thomas@baml.com	Residential Funding Company, LLC	Custodial
652	1235642225	Bank of America, N.A.	333 South Hope Street Los Angeles, CA 90071	Marilyn Thomas 213-621-4944 marilyn.thomas@baml.com	Residential Funding Company, LLC	Custodial
653	1235642244	Bank of America, N.A.	333 South Hope Street Los Angeles, CA 90071	Marilyn Thomas 213-621-4944 marilyn.thomas@baml.com	Residential Funding Company, LLC	Custodial
654	1235642249	Bank of America, N.A.	333 South Hope Street Los Angeles, CA 90071	Marilyn Thomas 213-621-4944 marilyn.thomas@baml.com	Residential Funding Company, LLC	Custodial
655	1235642263	Bank of America, N.A.	333 South Hope Street Los Angeles, CA 90071	Marilyn Thomas 213-621-4944 marilyn.thomas@baml.com	Residential Funding Company, LLC	Custodial
656	1235642268	Bank of America, N.A.	333 South Hope Street Los Angeles, CA 90071	Marilyn Thomas 213-621-4944 marilyn.thomas@baml.com	Residential Funding Company, LLC	Custodial
657	1235642287	Bank of America, N.A.	333 South Hope Street Los Angeles, CA 90071	Marilyn Thomas 213-621-4944 marilyn.thomas@baml.com	Residential Funding Company, LLC	Custodial
658	1235642300	Bank of America, N.A.	333 South Hope Street Los Angeles, CA 90071	Marilyn Thomas 213-621-4944 marilyn.thomas@baml.com	Residential Funding Company, LLC	Custodial
659	1235642324	Bank of America, N.A.	333 South Hope Street Los Angeles, CA 90071	Marilyn Thomas 213-621-4944 marilyn.thomas@baml.com	Residential Funding Company, LLC	Custodial
660	1235642329	Bank of America, N.A.	333 South Hope Street Los Angeles, CA 90071	Marilyn Thomas 213-621-4944 marilyn.thomas@baml.com	Residential Funding Company, LLC	Custodial
661	1235642343	Bank of America, N.A.	333 South Hope Street Los Angeles, CA 90071	Marilyn Thomas 213-621-4944 marilyn.thomas@baml.com	Residential Funding Company, LLC	Custodial
662	1235642348	Bank of America, N.A.	333 South Hope Street Los Angeles, CA 90071	Marilyn Thomas 213-621-4944 marilyn.thomas@baml.com	Residential Funding Company, LLC	Custodial
663	1235642362	Bank of America, N.A.	333 South Hope Street Los Angeles, CA 90071	Marilyn Thomas 213-621-4944 marilyn.thomas@baml.com	Residential Funding Company, LLC	Custodial
664	1235642367	Bank of America, N.A.	333 South Hope Street Los Angeles, CA 90071	Marilyn Thomas 213-621-4944 marilyn.thomas@baml.com	Residential Funding Company, LLC	Custodial
665	1235642381	Bank of America, N.A.	333 South Hope Street Los Angeles, CA 90071	Marilyn Thomas 213-621-4944 marilyn.thomas@baml.com	Residential Funding Company, LLC	Custodial
666	1235642386	Bank of America, N.A.	333 South Hope Street Los Angeles, CA 90071	Marilyn Thomas 213-621-4944 marilyn.thomas@baml.com	Residential Funding Company, LLC	Custodial
667	1235642404	Bank of America, N.A.	333 South Hope Street Los Angeles, CA 90071	Marilyn Thomas 213-621-4944 marilyn.thomas@baml.com	Residential Funding Company, LLC	Custodial
668	1235642409	Bank of America, N.A.	333 South Hope Street Los Angeles, CA 90071	Marilyn Thomas 213-621-4944 marilyn.thomas@baml.com	Residential Funding Company, LLC	Custodial
669	1235642442	Bank of America, N.A.	333 South Hope Street Los Angeles, CA 90071	Marilyn Thomas 213-621-4944 marilyn.thomas@baml.com	Residential Funding Company, LLC	Custodial
670	1235642447	Bank of America, N.A.	333 South Hope Street Los Angeles, CA 90071	Marilyn Thomas 213-621-4944 marilyn.thomas@baml.com	Residential Funding Company, LLC	Custodial
671	1235642461	Bank of America, N.A.	333 South Hope Street Los Angeles, CA 90071	Marilyn Thomas 213-621-4944 marilyn.thomas@baml.com	Residential Funding Company, LLC	Custodial
672	1235642466	Bank of America, N.A.	333 South Hope Street Los Angeles, CA 90071	Marilyn Thomas 213-621-4944 marilyn.thomas@baml.com	Residential Funding Company, LLC	Custodial
673	1235642480	Bank of America, N.A.	333 South Hope Street Los Angeles, CA 90071	Marilyn Thomas 213-621-4944 marilyn.thomas@baml.com	Residential Funding Company, LLC	Custodial
674	1235642485	Bank of America, N.A.	333 South Hope Street Los Angeles, CA 90071	Marilyn Thomas 213-621-4944 marilyn.thomas@baml.com	Residential Funding Company, LLC	Custodial
675	1235642522	Bank of America, N.A.	333 South Hope Street Los Angeles, CA 90071	Marilyn Thomas 213-621-4944 marilyn.thomas@baml.com	Residential Funding Company, LLC	Custodial
676	1235642527	Bank of America, N.A.	333 South Hope Street Los Angeles, CA 90071	Marilyn Thomas 213-621-4944 marilyn.thomas@baml.com	Residential Funding Company, LLC	Custodial
677	1235642541	Bank of America, N.A.	333 South Hope Street Los Angeles, CA 90071	Marilyn Thomas 213-621-4944 marilyn.thomas@baml.com	Residential Funding Company, LLC	Custodial
678	1235642546	Bank of America, N.A.	333 South Hope Street Los Angeles, CA 90071	Marilyn Thomas 213-621-4944 marilyn.thomas@baml.com	Residential Funding Company, LLC	Custodial
679	1235642560	Bank of America, N.A.	333 South Hope Street Los Angeles, CA 90071	Marilyn Thomas 213-621-4944 marilyn.thomas@baml.com	Residential Funding Company, LLC	Custodial
680	1235642565	Bank of America, N.A.	333 South Hope Street Los Angeles, CA 90071	Marilyn Thomas 213-621-4944 marilyn.thomas@baml.com	Residential Funding Company, LLC	Custodial
681	1235642584	Bank of America, N.A.	333 South Hope Street Los Angeles, CA 90071	Marilyn Thomas 213-621-4944 marilyn.thomas@baml.com	Residential Funding Company, LLC	Custodial
682	1235642589	Bank of America, N.A.	333 South Hope Street Los Angeles, CA 90071	Marilyn Thomas 213-621-4944 marilyn.thomas@baml.com	Residential Funding Company, LLC	Custodial
683	1235642602	Bank of America, N.A.	333 South Hope Street Los Angeles, CA 90071	Marilyn Thomas 213-621-4944 marilyn.thomas@baml.com	Residential Funding Company, LLC	Custodial
684	1235642607	Bank of America, N.A.	333 South Hope Street Los Angeles, CA 90071	Marilyn Thomas 213-621-4944 marilyn.thomas@baml.com	Residential Funding Company, LLC	Custodial
685	1235642621	Bank of America, N.A.	333 South Hope Street Los Angeles, CA 90071	Marilyn Thomas 213-621-4944 marilyn.thomas@baml.com	Residential Funding Company, LLC	Custodial
686	1235642626	Bank of America, N.A.	333 South Hope Street Los Angeles, CA 90071	Marilyn Thomas 213-621-4944 marilyn.thomas@baml.com	Residential Funding Company, LLC	Custodial
687	1235642664	Bank of America, N.A.	333 South Hope Street Los Angeles, CA 90071	Marilyn Thomas 213-621-4944 marilyn.thomas@baml.com	Residential Funding Company, LLC	Custodial
688	1235642683	Bank of America, N.A.	333 South Hope Street Los Angeles, CA 90071	Marilyn Thomas 213-621-4944 marilyn.thomas@baml.com	Residential Funding Company, LLC	Custodial

Privileged and Confidential

Exhibit B - Bank Accounts

Ref #	Account Number	Bank	Address	Contact	Corporate/Company Code	Account Type
689	1235642701	Bank of America, N.A.	333 South Hope Street Los Angeles, CA 90071	Marilyn Thomas 213-621-4944 marilyn.thomas@baml.com	Residential Funding Company, LLC	Custodial
690	1235642706	Bank of America, N.A.	333 South Hope Street Los Angeles, CA 90071	Marilyn Thomas 213-621-4944 marilyn.thomas@baml.com	Residential Funding Company, LLC	Custodial
691	1235642720	Bank of America, N.A.	333 South Hope Street Los Angeles, CA 90071	Marilyn Thomas 213-621-4944 marilyn.thomas@baml.com	Residential Funding Company, LLC	Custodial
692	1235642725	Bank of America, N.A.	333 South Hope Street Los Angeles, CA 90071	Marilyn Thomas 213-621-4944 marilyn.thomas@baml.com	Residential Funding Company, LLC	Custodial
693	1235642763	Bank of America, N.A.	333 South Hope Street Los Angeles, CA 90071	Marilyn Thomas 213-621-4944 marilyn.thomas@baml.com	Residential Funding Company, LLC	Custodial
694	1235642768	Bank of America, N.A.	333 South Hope Street Los Angeles, CA 90071	Marilyn Thomas 213-621-4944 marilyn.thomas@baml.com	Residential Funding Company, LLC	Custodial
695	1235642787	Bank of America, N.A.	333 South Hope Street Los Angeles, CA 90071	Marilyn Thomas 213-621-4944 marilyn.thomas@baml.com	Residential Funding Company, LLC	Custodial
696	1235642805	Bank of America, N.A.	333 South Hope Street Los Angeles, CA 90071	Marilyn Thomas 213-621-4944 marilyn.thomas@baml.com	Residential Funding Company, LLC	Custodial
697	1235642824	Bank of America, N.A.	333 South Hope Street Los Angeles, CA 90071	Marilyn Thomas 213-621-4944 marilyn.thomas@baml.com	Residential Funding Company, LLC	Custodial
698	1235642829	Bank of America, N.A.	333 South Hope Street Los Angeles, CA 90071	Marilyn Thomas 213-621-4944 marilyn.thomas@baml.com	Residential Funding Company, LLC	Custodial
699	1235642862	Bank of America, N.A.	333 South Hope Street Los Angeles, CA 90071	Marilyn Thomas 213-621-4944 marilyn.thomas@baml.com	Residential Funding Company, LLC	Custodial
700	1235737464	Bank of America, N.A.	333 South Hope Street Los Angeles, CA 90071	Marilyn Thomas 213-621-4944 marilyn.thomas@baml.com	Residential Funding Company, LLC	Custodial
701	1235737469	Bank of America, N.A.	333 South Hope Street Los Angeles, CA 90071	Marilyn Thomas 213-621-4944 marilyn.thomas@baml.com	Residential Funding Company, LLC	Custodial
702	1235795266	Bank of America, N.A.	333 South Hope Street Los Angeles, CA 90071	Marilyn Thomas 213-621-4944 marilyn.thomas@baml.com	GMAC Mortgage, LLC	Custodial
703	1235795280	Bank of America, N.A.	333 South Hope Street Los Angeles, CA 90071	Marilyn Thomas 213-621-4944 marilyn.thomas@baml.com	GMAC Mortgage, LLC	Custodial
704	1235795285	Bank of America, N.A.	333 South Hope Street Los Angeles, CA 90071	Marilyn Thomas 213-621-4944 marilyn.thomas@baml.com	GMAC Mortgage, LLC	Custodial
705	1235795303	Bank of America, N.A.	333 South Hope Street Los Angeles, CA 90071	Marilyn Thomas 213-621-4944 marilyn.thomas@baml.com	GMAC Mortgage, LLC	Custodial
706	1235795308	Bank of America, N.A.	333 South Hope Street Los Angeles, CA 90071	Marilyn Thomas 213-621-4944 marilyn.thomas@baml.com	GMAC Mortgage, LLC	Custodial
707	1235795327	Bank of America, N.A.	333 South Hope Street Los Angeles, CA 90071	Marilyn Thomas 213-621-4944 marilyn.thomas@baml.com	GMAC Mortgage, LLC	Custodial
708	1235795341	Bank of America, N.A.	333 South Hope Street Los Angeles, CA 90071	Marilyn Thomas 213-621-4944 marilyn.thomas@baml.com	GMAC Mortgage, LLC	Custodial
709	1235795346	Bank of America, N.A.	333 South Hope Street Los Angeles, CA 90071	Marilyn Thomas 213-621-4944 marilyn.thomas@baml.com	GMAC Mortgage, LLC	Custodial
710	1235795360	Bank of America, N.A.	333 South Hope Street Los Angeles, CA 90071	Marilyn Thomas 213-621-4944 marilyn.thomas@baml.com	GMAC Mortgage, LLC	Custodial
711	1235795365	Bank of America, N.A.	333 South Hope Street Los Angeles, CA 90071	Marilyn Thomas 213-621-4944 marilyn.thomas@baml.com	GMAC Mortgage, LLC	Custodial
712	1235795384	Bank of America, N.A.	333 South Hope Street Los Angeles, CA 90071	Marilyn Thomas 213-621-4944 marilyn.thomas@baml.com	GMAC Mortgage, LLC	Custodial
713	1235795389	Bank of America, N.A.	333 South Hope Street Los Angeles, CA 90071	Marilyn Thomas 213-621-4944 marilyn.thomas@baml.com	GMAC Mortgage, LLC	Custodial
714	1235795402	Bank of America, N.A.	333 South Hope Street Los Angeles, CA 90071	Marilyn Thomas 213-621-4944 marilyn.thomas@baml.com	GMAC Mortgage, LLC	Custodial
715	1235795407	Bank of America, N.A.	333 South Hope Street Los Angeles, CA 90071	Marilyn Thomas 213-621-4944 marilyn.thomas@baml.com	GMAC Mortgage, LLC	Custodial
716	1235795421	Bank of America, N.A.	333 South Hope Street Los Angeles, CA 90071	Marilyn Thomas 213-621-4944 marilyn.thomas@baml.com	GMAC Mortgage, LLC	Custodial
717	1235795440	Bank of America, N.A.	333 South Hope Street Los Angeles, CA 90071	Marilyn Thomas 213-621-4944 marilyn.thomas@baml.com	GMAC Mortgage, LLC	Custodial
718	1235795445	Bank of America, N.A.	333 South Hope Street Los Angeles, CA 90071	Marilyn Thomas 213-621-4944 marilyn.thomas@baml.com	GMAC Mortgage, LLC	Custodial
719	1235795469	Bank of America, N.A.	333 South Hope Street Los Angeles, CA 90071	Marilyn Thomas 213-621-4944 marilyn.thomas@baml.com	GMAC Mortgage, LLC	Custodial
720	1235795483	Bank of America, N.A.	333 South Hope Street Los Angeles, CA 90071	Marilyn Thomas 213-621-4944 marilyn.thomas@baml.com	GMAC Mortgage, LLC	Custodial
721	1235795520	Bank of America, N.A.	333 South Hope Street Los Angeles, CA 90071	Marilyn Thomas 213-621-4944 marilyn.thomas@baml.com	GMAC Mortgage, LLC	Custodial
722	1235795525	Bank of America, N.A.	333 South Hope Street Los Angeles, CA 90071	Marilyn Thomas 213-621-4944 marilyn.thomas@baml.com	GMAC Mortgage, LLC	Custodial
723	1235795544	Bank of America, N.A.	333 South Hope Street Los Angeles, CA 90071	Marilyn Thomas 213-621-4944 marilyn.thomas@baml.com	GMAC Mortgage, LLC	Custodial
724	1235795549	Bank of America, N.A.	333 South Hope Street Los Angeles, CA 90071	Marilyn Thomas 213-621-4944 marilyn.thomas@baml.com	GMAC Mortgage, LLC	Custodial
725	1235795563	Bank of America, N.A.	333 South Hope Street Los Angeles, CA 90071	Marilyn Thomas 213-621-4944 marilyn.thomas@baml.com	GMAC Mortgage, LLC	Custodial
726	1235795568	Bank of America, N.A.	333 South Hope Street Los Angeles, CA 90071	Marilyn Thomas 213-621-4944 marilyn.thomas@baml.com	GMAC Mortgage, LLC	Custodial
727	1235795582	Bank of America, N.A.	333 South Hope Street Los Angeles, CA 90071	Marilyn Thomas 213-621-4944 marilyn.thomas@baml.com	GMAC Mortgage, LLC	Custodial
728	1235795600	Bank of America, N.A.	333 South Hope Street Los Angeles, CA 90071	Marilyn Thomas 213-621-4944 marilyn.thomas@baml.com	GMAC Mortgage, LLC	Custodial
729	1235820789	Bank of America, N.A.	333 South Hope Street Los Angeles, CA 90071	Marilyn Thomas 213-621-4944 marilyn.thomas@baml.com	GMAC Mortgage, LLC	Custodial
730	1235830665	Bank of America, N.A.	333 South Hope Street Los Angeles, CA 90071	Marilyn Thomas 213-621-4944 marilyn.thomas@baml.com	GMAC Mortgage, LLC	Custodial
731	1235830684	Bank of America, N.A.	333 South Hope Street Los Angeles, CA 90071	Marilyn Thomas 213-621-4944 marilyn.thomas@baml.com	GMAC Mortgage, LLC	Custodial

Privileged and Confidential

Exhibit B - Bank Accounts

Ref #	Account Number	Bank	Address	Contact	Corporate/Company Code	Account Type
732	1235830689	Bank of America, N.A.	333 South Hope Street Los Angeles, CA 90071	Marilyn Thomas 213-621-4944 marilyn.thomas@baml.com	GMAC Mortgage, LLC	Custodial
733	1235830702	Bank of America, N.A.	333 South Hope Street Los Angeles, CA 90071	Marilyn Thomas 213-621-4944 marilyn.thomas@baml.com	GMAC Mortgage, LLC	Custodial
734	1235830707	Bank of America, N.A.	333 South Hope Street Los Angeles, CA 90071	Marilyn Thomas 213-621-4944 marilyn.thomas@baml.com	GMAC Mortgage, LLC	Custodial
735	1235830721	Bank of America, N.A.	333 South Hope Street Los Angeles, CA 90071	Marilyn Thomas 213-621-4944 marilyn.thomas@baml.com	GMAC Mortgage, LLC	Custodial
736	1235830726	Bank of America, N.A.	333 South Hope Street Los Angeles, CA 90071	Marilyn Thomas 213-621-4944 marilyn.thomas@baml.com	GMAC Mortgage, LLC	Custodial
737	1235830764	Bank of America, N.A.	333 South Hope Street Los Angeles, CA 90071	Marilyn Thomas 213-621-4944 marilyn.thomas@baml.com	GMAC Mortgage, LLC	Custodial
738	1235830769	Bank of America, N.A.	333 South Hope Street Los Angeles, CA 90071	Marilyn Thomas 213-621-4944 marilyn.thomas@baml.com	GMAC Mortgage, LLC	Custodial
739	1235830788	Bank of America, N.A.	333 South Hope Street Los Angeles, CA 90071	Marilyn Thomas 213-621-4944 marilyn.thomas@baml.com	GMAC Mortgage, LLC	Custodial
740	1235830825	Bank of America, N.A.	333 South Hope Street Los Angeles, CA 90071	Marilyn Thomas 213-621-4944 marilyn.thomas@baml.com	GMAC Mortgage, LLC	Custodial
741	1235830849	Bank of America, N.A.	333 South Hope Street Los Angeles, CA 90071	Marilyn Thomas 213-621-4944 marilyn.thomas@baml.com	GMAC Mortgage, LLC	Custodial
742	1235830863	Bank of America, N.A.	333 South Hope Street Los Angeles, CA 90071	Marilyn Thomas 213-621-4944 marilyn.thomas@baml.com	GMAC Mortgage, LLC	Custodial
743	1235830868	Bank of America, N.A.	333 South Hope Street Los Angeles, CA 90071	Marilyn Thomas 213-621-4944 marilyn.thomas@baml.com	GMAC Mortgage, LLC	Custodial
744	1235830887	Bank of America, N.A.	333 South Hope Street Los Angeles, CA 90071	Marilyn Thomas 213-621-4944 marilyn.thomas@baml.com	GMAC Mortgage, LLC	Custodial
745	1235830900	Bank of America, N.A.	333 South Hope Street Los Angeles, CA 90071	Marilyn Thomas 213-621-4944 marilyn.thomas@baml.com	GMAC Mortgage, LLC	Custodial
746	1235830905	Bank of America, N.A.	333 South Hope Street Los Angeles, CA 90071	Marilyn Thomas 213-621-4944 marilyn.thomas@baml.com	GMAC Mortgage, LLC	Custodial
747	1235830924	Bank of America, N.A.	333 South Hope Street Los Angeles, CA 90071	Marilyn Thomas 213-621-4944 marilyn.thomas@baml.com	GMAC Mortgage, LLC	Custodial
748	1235830929	Bank of America, N.A.	333 South Hope Street Los Angeles, CA 90071	Marilyn Thomas 213-621-4944 marilyn.thomas@baml.com	GMAC Mortgage, LLC	Custodial
749	1235830943	Bank of America, N.A.	333 South Hope Street Los Angeles, CA 90071	Marilyn Thomas 213-621-4944 marilyn.thomas@baml.com	GMAC Mortgage, LLC	Custodial
750	1235830948	Bank of America, N.A.	333 South Hope Street Los Angeles, CA 90071	Marilyn Thomas 213-621-4944 marilyn.thomas@baml.com	GMAC Mortgage, LLC	Custodial
751	1235830981	Bank of America, N.A.	333 South Hope Street Los Angeles, CA 90071	Marilyn Thomas 213-621-4944 marilyn.thomas@baml.com	GMAC Mortgage, LLC	Custodial
752	1235893597	Bank of America, N.A.	333 South Hope Street Los Angeles, CA 90071	Marilyn Thomas 213-621-4944 marilyn.thomas@baml.com	GMAC Mortgage, LLC	Custodial
753	1257010446	Bank of America, N.A.	333 South Hope Street Los Angeles, CA 90071	Marilyn Thomas 213-621-4944 marilyn.thomas@baml.com	Residential Funding Company, LLC	Custodial
754	1257013091	Bank of America, N.A.	333 South Hope Street Los Angeles, CA 90071	Marilyn Thomas 213-621-4944 marilyn.thomas@baml.com	Residential Capital, LLC	Operating - Concentration
755	1257025839	Bank of America, N.A.	333 South Hope Street Los Angeles, CA 90071	Marilyn Thomas 213-621-4944 marilyn.thomas@baml.com	Residential Funding Company, LLC	Operating - General
756	1257039454	Bank of America, N.A.	333 South Hope Street Los Angeles, CA 90071	Marilyn Thomas 213-621-4944 marilyn.thomas@baml.com	GMAC Mortgage, LLC	Operating - Disbursement
757	1257046360	Bank of America, N.A.	333 South Hope Street Los Angeles, CA 90071	Marilyn Thomas 213-621-4944 marilyn.thomas@baml.com	Residential Funding Company, LLC	Custodial
758	1257213293	Bank of America, N.A.	333 South Hope Street Los Angeles, CA 90071	Marilyn Thomas 213-621-4944 marilyn.thomas@baml.com	Residential Funding Company, LLC	Custodial
759	1257213298	Bank of America, N.A.	333 South Hope Street Los Angeles, CA 90071	Marilyn Thomas 213-621-4944 marilyn.thomas@baml.com	Residential Funding Company, LLC	Custodial
760	1257300276	Bank of America, N.A.	333 South Hope Street Los Angeles, CA 90071	Marilyn Thomas 213-621-4944 marilyn.thomas@baml.com	Residential Funding Company, LLC	Custodial
761	1453003933	Bank of America, N.A.	333 South Hope Street Los Angeles, CA 90071	Marilyn Thomas 213-621-4944 marilyn.thomas@baml.com	GMAC Mortgage, LLC	Operating - General
762	7765600532	Bank of America, N.A.	333 South Hope Street Los Angeles, CA 90071	Marilyn Thomas 213-621-4944 marilyn.thomas@baml.com	GMAC Mortgage, LLC	Operating - Disbursement
763	19917	Bank of New York Mellon	One Wall Street New York, NY 10286	Kevin Higgins 212-635-7878 kevin.higgins@bnymellon.com	GMAC Mortgage, LLC	Non-Operating - Other
764	45349	Bank of New York Mellon	One Wall Street New York, NY 10286	Kevin Higgins 212-635-7878 kevin.higgins@bnymellon.com	GMAC Mortgage, LLC	Custodial
765	45403	Bank of New York Mellon	One Wall Street New York, NY 10286	Kevin Higgins 212-635-7878 kevin.higgins@bnymellon.com	GMAC Mortgage, LLC	Custodial
766	569079	Bank of New York Mellon	One Wall Street New York, NY 10286	Kevin Higgins 212-635-7878 kevin.higgins@bnymellon.com	GMAC Mortgage, LLC	Operating - General
767	587105	Bank of New York Mellon	One Wall Street New York, NY 10286	Kevin Higgins 212-635-7878 kevin.higgins@bnymellon.com	GMAC Mortgage, LLC	Custodial
768	11215175	Citibank, N.A.	388 Greenwich St New York, NY 10013	Emil Cornejo 212-816-6941 emil.f.cornejo@citi.com	Residential Capital, LLC	Operating - Forex
769	11215183	Citibank, N.A.	388 Greenwich St New York, NY 10013	Emil Cornejo 212-816-6941 emil.f.cornejo@citi.com	Residential Capital, LLC	Operating - Forex
770	11216643	Citibank, N.A.	388 Greenwich St New York, NY 10013	Emil Cornejo 212-816-6941 emil.f.cornejo@citi.com	Residential Capital, LLC	Operating - Forex
771	11902075	Citibank, N.A.	388 Greenwich St New York, NY 10013	Emil Cornejo 212-816-6941 emil.f.cornejo@citi.com	Residential Capital, LLC	Operating - Forex
772	12141264	Citibank, N.A.	388 Greenwich St New York, NY 10013	Emil Cornejo 212-816-6941 emil.f.cornejo@citi.com	Passive Asset Transactions LLC	Operating - Forex
773	30609909	Citibank, N.A.	388 Greenwich St New York, NY 10013	Emil Cornejo 212-816-6941 emil.f.cornejo@citi.com	GMAC Mortgage, LLC	Operating - Other
774	30609933	Citibank, N.A.	388 Greenwich St New York, NY 10013	Emil Cornejo 212-816-6941 emil.f.cornejo@citi.com	GMAC Mortgage, LLC	Operating - Other

Privileged and Confidential

Exhibit B - Bank Accounts

Ref #	Account Number	Bank	Address	Contact	Corporate/Company Code	Account Type
775	30838584	Citibank, N.A.	388 Greenwich St New York, NY 10013	Emil Cornejo 212-816-6941 emil.f.cornejo@citi.com	Ditech, LLC	Operating - General
776	9994724806	Citibank, N.A.	388 Greenwich St New York, NY 10013	Emil Cornejo 212-816-6941 emil.f.cornejo@citi.com	GMAC Mortgage, LLC	Restricted Cash - Depository
777	330608	Deutsche Bank Trust Company Americas	60 Wall Street MS NYC 60-2802 New York, NY 10005	Marco Caputi 212-250-1236 marco.p.caputi@db.com	GMAC Mortgage, LLC	Operating - Other
778	424815	Deutsche Bank Trust Company Americas	60 Wall Street MS NYC 60-2802 New York, NY 10005	Marco Caputi 212-250-1236 marco.p.caputi@db.com	GMAC Mortgage, LLC	Custodial
779	440292	Deutsche Bank Trust Company Americas	60 Wall Street MS NYC 60-2802 New York, NY 10005	Marco Caputi 212-250-1236 marco.p.caputi@db.com	GMAC Mortgage, LLC	Custodial
780	440305	Deutsche Bank Trust Company Americas	60 Wall Street MS NYC 60-2802 New York, NY 10005	Marco Caputi 212-250-1236 marco.p.caputi@db.com	GMAC Mortgage, LLC	Custodial
781	440313	Deutsche Bank Trust Company Americas	60 Wall Street MS NYC 60-2802 New York, NY 10005	Marco Caputi 212-250-1236 marco.p.caputi@db.com	GMAC Mortgage, LLC	Custodial
782	440321	Deutsche Bank Trust Company Americas	60 Wall Street MS NYC 60-2802 New York, NY 10005	Marco Caputi 212-250-1236 marco.p.caputi@db.com	GMAC Mortgage, LLC	Custodial
783	937698	JPMORGAN CHASE BANK, N.A.	3rd First National Plaza Chicago, IL 60602	William Sholten 312-732-4600 william.sholten@jpmorgan.com	GMAC Mortgage, LLC	Non-Operating - Disbursement
784	937839	JPMORGAN CHASE BANK, N.A.	3rd First National Plaza Chicago, IL 60602	William Sholten 312-732-4600 william.sholten@jpmorgan.com	GMAC Mortgage, LLC	Non-Operating - Disbursement
785	944300	JPMORGAN CHASE BANK, N.A.	3rd First National Plaza Chicago, IL 60602	William Sholten 312-732-4600 william.sholten@jpmorgan.com	GMAC Mortgage, LLC	Non-Operating - Disbursement
786	976601	JPMORGAN CHASE BANK, N.A.	3rd First National Plaza Chicago, IL 60602	William Sholten 312-732-4600 william.sholten@jpmorgan.com	GMAC Mortgage, LLC	Non-Operating - Disbursement
787	1001031	JPMORGAN CHASE BANK, N.A.	3rd First National Plaza Chicago, IL 60602	William Sholten 312-732-4600 william.sholten@jpmorgan.com	GMAC Mortgage, LLC	Custodial
788	1001262	JPMORGAN CHASE BANK, N.A.	3rd First National Plaza Chicago, IL 60602	William Sholten 312-732-4600 william.sholten@jpmorgan.com	GMAC Mortgage, LLC	Custodial
789	1001767	JPMORGAN CHASE BANK, N.A.	3rd First National Plaza Chicago, IL 60602	William Sholten 312-732-4600 william.sholten@jpmorgan.com	GMAC Mortgage, LLC	Custodial
790	1002534	JPMORGAN CHASE BANK, N.A.	3rd First National Plaza Chicago, IL 60602	William Sholten 312-732-4600 william.sholten@jpmorgan.com	GMAC Mortgage, LLC	Custodial
791	1013929	JPMORGAN CHASE BANK, N.A.	3rd First National Plaza Chicago, IL 60602	William Sholten 312-732-4600 william.sholten@jpmorgan.com	GMAC Mortgage, LLC	Custodial
792	1014505	JPMORGAN CHASE BANK, N.A.	3rd First National Plaza Chicago, IL 60602	William Sholten 312-732-4600 william.sholten@jpmorgan.com	GMAC Mortgage, LLC	Custodial
793	1015064	JPMORGAN CHASE BANK, N.A.	3rd First National Plaza Chicago, IL 60602	William Sholten 312-732-4600 william.sholten@jpmorgan.com	GMAC Mortgage, LLC	Custodial
794	1017300	JPMORGAN CHASE BANK, N.A.	3rd First National Plaza Chicago, IL 60602	William Sholten 312-732-4600 william.sholten@jpmorgan.com	GMAC Mortgage, LLC	Custodial
795	1017318	JPMORGAN CHASE BANK, N.A.	3rd First National Plaza Chicago, IL 60602	William Sholten 312-732-4600 william.sholten@jpmorgan.com	GMAC Mortgage, LLC	Custodial
796	1017326	JPMORGAN CHASE BANK, N.A.	3rd First National Plaza Chicago, IL 60602	William Sholten 312-732-4600 william.sholten@jpmorgan.com	GMAC Mortgage, LLC	Custodial
797	1017334	JPMORGAN CHASE BANK, N.A.	3rd First National Plaza Chicago, IL 60602	William Sholten 312-732-4600 william.sholten@jpmorgan.com	GMAC Mortgage, LLC	Custodial
798	1017409	JPMORGAN CHASE BANK, N.A.	3rd First National Plaza Chicago, IL 60602	William Sholten 312-732-4600 william.sholten@jpmorgan.com	GMAC Mortgage, LLC	Custodial
799	1017508	JPMORGAN CHASE BANK, N.A.	3rd First National Plaza Chicago, IL 60602	William Sholten 312-732-4600 william.sholten@jpmorgan.com	GMAC Mortgage, LLC	Custodial
800	1017524	JPMORGAN CHASE BANK, N.A.	3rd First National Plaza Chicago, IL 60602	William Sholten 312-732-4600 william.sholten@jpmorgan.com	GMAC Mortgage, LLC	Custodial
801	1017532	JPMORGAN CHASE BANK, N.A.	3rd First National Plaza Chicago, IL 60602	William Sholten 312-732-4600 william.sholten@jpmorgan.com	GMAC Mortgage, LLC	Custodial
802	1018092	JPMORGAN CHASE BANK, N.A.	3rd First National Plaza Chicago, IL 60602	William Sholten 312-732-4600 william.sholten@jpmorgan.com	GMAC Mortgage, LLC	Custodial
803	1023936	JPMORGAN CHASE BANK, N.A.	3rd First National Plaza Chicago, IL 60602	William Sholten 312-732-4600 william.sholten@jpmorgan.com	Residential Funding Company, LLC	Operating - Collection
804	1038561	JPMORGAN CHASE BANK, N.A.	3rd First National Plaza Chicago, IL 60602	William Sholten 312-732-4600 william.sholten@jpmorgan.com	GMAC Mortgage, LLC	Custodial
805	1038579	JPMORGAN CHASE BANK, N.A.	3rd First National Plaza Chicago, IL 60602	William Sholten 312-732-4600 william.sholten@jpmorgan.com	GMAC Mortgage, LLC	Custodial
806	1038611	JPMORGAN CHASE BANK, N.A.	3rd First National Plaza Chicago, IL 60602	William Sholten 312-732-4600 william.sholten@jpmorgan.com	GMAC Mortgage, LLC	Custodial
807	1038629	JPMORGAN CHASE BANK, N.A.	3rd First National Plaza Chicago, IL 60602	William Sholten 312-732-4600 william.sholten@jpmorgan.com	GMAC Mortgage, LLC	Custodial
808	1038637	JPMORGAN CHASE BANK, N.A.	3rd First National Plaza Chicago, IL 60602	William Sholten 312-732-4600 william.sholten@jpmorgan.com	GMAC Mortgage, LLC	Custodial
809	1038645	JPMORGAN CHASE BANK, N.A.	3rd First National Plaza Chicago, IL 60602	William Sholten 312-732-4600 william.sholten@jpmorgan.com	GMAC Mortgage, LLC	Custodial
810	1038660	JPMORGAN CHASE BANK, N.A.	3rd First National Plaza Chicago, IL 60602	William Sholten 312-732-4600 william.sholten@jpmorgan.com	GMAC Mortgage, LLC	Custodial
811	1038678	JPMORGAN CHASE BANK, N.A.	3rd First National Plaza Chicago, IL 60602	William Sholten 312-732-4600 william.sholten@jpmorgan.com	GMAC Mortgage, LLC	Custodial
812	1038694	JPMORGAN CHASE BANK, N.A.	3rd First National Plaza Chicago, IL 60602	William Sholten 312-732-4600 william.sholten@jpmorgan.com	GMAC Mortgage, LLC	Custodial
813	1038777	JPMORGAN CHASE BANK, N.A.	3rd First National Plaza Chicago, IL 60602	William Sholten 312-732-4600 william.sholten@jpmorgan.com	GMAC Mortgage, LLC	Custodial
814	1038785	JPMORGAN CHASE BANK, N.A.	3rd First National Plaza Chicago, IL 60602	William Sholten 312-732-4600 william.sholten@jpmorgan.com	GMAC Mortgage, LLC	Custodial
815	1060706	JPMORGAN CHASE BANK, N.A.	3rd First National Plaza Chicago, IL 60602	William Sholten 312-732-4600 william.sholten@jpmorgan.com	GMAC Mortgage, LLC	Custodial
816	1060714	JPMORGAN CHASE BANK, N.A.	3rd First National Plaza Chicago, IL 60602	William Sholten 312-732-4600 william.sholten@jpmorgan.com	GMAC Mortgage, LLC	Custodial
817	1060755	JPMORGAN CHASE BANK, N.A.	3rd First National Plaza Chicago, IL 60602	William Sholten 312-732-4600 william.sholten@jpmorgan.com	GMAC Mortgage, LLC	Custodial

Privileged and Confidential

Exhibit B - Bank Accounts

Ref #	Account Number	Bank	Address	Contact	Corporate/Company Code	Account Type
818	1060797	JPMORGAN CHASE BANK, N.A.	3rd First National Plaza Chicago, IL 60602	William Sholten 312-732-4600 william.sholten@jpmorgan.com	GMAC Mortgage, LLC	Custodial
819	1060870	JPMORGAN CHASE BANK, N.A.	3rd First National Plaza Chicago, IL 60602	William Sholten 312-732-4600 william.sholten@jpmorgan.com	GMAC Mortgage, LLC	Custodial
820	1060896	JPMORGAN CHASE BANK, N.A.	3rd First National Plaza Chicago, IL 60602	William Sholten 312-732-4600 william.sholten@jpmorgan.com	GMAC Mortgage, LLC	Custodial
821	1060912	JPMORGAN CHASE BANK, N.A.	3rd First National Plaza Chicago, IL 60602	William Sholten 312-732-4600 william.sholten@jpmorgan.com	GMAC Mortgage, LLC	Custodial
822	1060938	JPMORGAN CHASE BANK, N.A.	3rd First National Plaza Chicago, IL 60602	William Sholten 312-732-4600 william.sholten@jpmorgan.com	GMAC Mortgage, LLC	Custodial
823	1060946	JPMORGAN CHASE BANK, N.A.	3rd First National Plaza Chicago, IL 60602	William Sholten 312-732-4600 william.sholten@jpmorgan.com	GMAC Mortgage, LLC	Custodial
824	1060995	JPMORGAN CHASE BANK, N.A.	3rd First National Plaza Chicago, IL 60602	William Sholten 312-732-4600 william.sholten@jpmorgan.com	GMAC Mortgage, LLC	Custodial
825	1061001	JPMORGAN CHASE BANK, N.A.	3rd First National Plaza Chicago, IL 60602	William Sholten 312-732-4600 william.sholten@jpmorgan.com	GMAC Mortgage, LLC	Custodial
826	1061019	JPMORGAN CHASE BANK, N.A.	3rd First National Plaza Chicago, IL 60602	William Sholten 312-732-4600 william.sholten@jpmorgan.com	GMAC Mortgage, LLC	Custodial
827	1061043	JPMORGAN CHASE BANK, N.A.	3rd First National Plaza Chicago, IL 60602	William Sholten 312-732-4600 william.sholten@jpmorgan.com	GMAC Mortgage, LLC	Custodial
828	1076512	JPMORGAN CHASE BANK, N.A.	3rd First National Plaza Chicago, IL 60602	William Sholten 312-732-4600 william.sholten@jpmorgan.com	GMAC Mortgage, LLC	Non-Operating - Receipt
829	1080761	JPMORGAN CHASE BANK, N.A.	3rd First National Plaza Chicago, IL 60602	William Sholten 312-732-4600 william.sholten@jpmorgan.com	GMAC Mortgage, LLC	Custodial
830	1080779	JPMORGAN CHASE BANK, N.A.	3rd First National Plaza Chicago, IL 60602	William Sholten 312-732-4600 william.sholten@jpmorgan.com	GMAC Mortgage, LLC	Custodial
831	1080787	JPMORGAN CHASE BANK, N.A.	3rd First National Plaza Chicago, IL 60602	William Sholten 312-732-4600 william.sholten@jpmorgan.com	GMAC Mortgage, LLC	Custodial
832	1080803	JPMORGAN CHASE BANK, N.A.	3rd First National Plaza Chicago, IL 60602	William Sholten 312-732-4600 william.sholten@jpmorgan.com	GMAC Mortgage, LLC	Custodial
833	1080829	JPMORGAN CHASE BANK, N.A.	3rd First National Plaza Chicago, IL 60602	William Sholten 312-732-4600 william.sholten@jpmorgan.com	GMAC Mortgage, LLC	Custodial
834	1080860	JPMORGAN CHASE BANK, N.A.	3rd First National Plaza Chicago, IL 60602	William Sholten 312-732-4600 william.sholten@jpmorgan.com	GMAC Mortgage, LLC	Custodial
835	1080878	JPMORGAN CHASE BANK, N.A.	3rd First National Plaza Chicago, IL 60602	William Sholten 312-732-4600 william.sholten@jpmorgan.com	GMAC Mortgage, LLC	Custodial
836	1080894	JPMORGAN CHASE BANK, N.A.	3rd First National Plaza Chicago, IL 60602	William Sholten 312-732-4600 william.sholten@jpmorgan.com	GMAC Mortgage, LLC	Custodial
837	1080910	JPMORGAN CHASE BANK, N.A.	3rd First National Plaza Chicago, IL 60602	William Sholten 312-732-4600 william.sholten@jpmorgan.com	GMAC Mortgage, LLC	Custodial
838	1080928	JPMORGAN CHASE BANK, N.A.	3rd First National Plaza Chicago, IL 60602	William Sholten 312-732-4600 william.sholten@jpmorgan.com	GMAC Mortgage, LLC	Custodial
839	1080936	JPMORGAN CHASE BANK, N.A.	3rd First National Plaza Chicago, IL 60602	William Sholten 312-732-4600 william.sholten@jpmorgan.com	GMAC Mortgage, LLC	Custodial
840	1080951	JPMORGAN CHASE BANK, N.A.	3rd First National Plaza Chicago, IL 60602	William Sholten 312-732-4600 william.sholten@jpmorgan.com	GMAC Mortgage, LLC	Custodial
841	1080969	JPMORGAN CHASE BANK, N.A.	3rd First National Plaza Chicago, IL 60602	William Sholten 312-732-4600 william.sholten@jpmorgan.com	GMAC Mortgage, LLC	Custodial
842	1080977	JPMORGAN CHASE BANK, N.A.	3rd First National Plaza Chicago, IL 60602	William Sholten 312-732-4600 william.sholten@jpmorgan.com	GMAC Mortgage, LLC	Custodial
843	1081058	JPMORGAN CHASE BANK, N.A.	3rd First National Plaza Chicago, IL 60602	William Sholten 312-732-4600 william.sholten@jpmorgan.com	GMAC Mortgage, LLC	Custodial
844	1081074	JPMORGAN CHASE BANK, N.A.	3rd First National Plaza Chicago, IL 60602	William Sholten 312-732-4600 william.sholten@jpmorgan.com	GMAC Mortgage, LLC	Custodial
845	1087154	JPMORGAN CHASE BANK, N.A.	3rd First National Plaza Chicago, IL 60602	William Sholten 312-732-4600 william.sholten@jpmorgan.com	GMAC Mortgage, LLC	Custodial
846	1087188	JPMORGAN CHASE BANK, N.A.	3rd First National Plaza Chicago, IL 60602	William Sholten 312-732-4600 william.sholten@jpmorgan.com	GMAC Mortgage, LLC	Custodial
847	1087196	JPMORGAN CHASE BANK, N.A.	3rd First National Plaza Chicago, IL 60602	William Sholten 312-732-4600 william.sholten@jpmorgan.com	GMAC Mortgage, LLC	Custodial
848	1087204	JPMORGAN CHASE BANK, N.A.	3rd First National Plaza Chicago, IL 60602	William Sholten 312-732-4600 william.sholten@jpmorgan.com	GMAC Mortgage, LLC	Custodial
849	1087212	JPMORGAN CHASE BANK, N.A.	3rd First National Plaza Chicago, IL 60602	William Sholten 312-732-4600 william.sholten@jpmorgan.com	GMAC Mortgage, LLC	Custodial
850	1087220	JPMORGAN CHASE BANK, N.A.	3rd First National Plaza Chicago, IL 60602	William Sholten 312-732-4600 william.sholten@jpmorgan.com	GMAC Mortgage, LLC	Custodial
851	1087261	JPMORGAN CHASE BANK, N.A.	3rd First National Plaza Chicago, IL 60602	William Sholten 312-732-4600 william.sholten@jpmorgan.com	GMAC Mortgage, LLC	Custodial
852	1087378	JPMORGAN CHASE BANK, N.A.	3rd First National Plaza Chicago, IL 60602	William Sholten 312-732-4600 william.sholten@jpmorgan.com	GMAC Mortgage, LLC	Custodial
853	1087386	JPMORGAN CHASE BANK, N.A.	3rd First National Plaza Chicago, IL 60602	William Sholten 312-732-4600 william.sholten@jpmorgan.com	GMAC Mortgage, LLC	Custodial
854	1087394	JPMORGAN CHASE BANK, N.A.	3rd First National Plaza Chicago, IL 60602	William Sholten 312-732-4600 william.sholten@jpmorgan.com	GMAC Mortgage, LLC	Custodial
855	1087469	JPMORGAN CHASE BANK, N.A.	3rd First National Plaza Chicago, IL 60602	William Sholten 312-732-4600 william.sholten@jpmorgan.com	GMAC Mortgage, LLC	Custodial
856	1090901	JPMORGAN CHASE BANK, N.A.	3rd First National Plaza Chicago, IL 60602	William Sholten 312-732-4600 william.sholten@jpmorgan.com	GMAC Mortgage, LLC	Non-Operating - General
857	1095249	JPMORGAN CHASE BANK, N.A.	3rd First National Plaza Chicago, IL 60602	William Sholten 312-732-4600 william.sholten@jpmorgan.com	GMAC Mortgage, LLC	Custodial
858	1095256	JPMORGAN CHASE BANK, N.A.	3rd First National Plaza Chicago, IL 60602	William Sholten 312-732-4600 william.sholten@jpmorgan.com	GMAC Mortgage, LLC	Custodial
859	1095264	JPMORGAN CHASE BANK, N.A.	3rd First National Plaza Chicago, IL 60602	William Sholten 312-732-4600 william.sholten@jpmorgan.com	GMAC Mortgage, LLC	Custodial
860	1095298	JPMORGAN CHASE BANK, N.A.	3rd First National Plaza Chicago, IL 60602	William Sholten 312-732-4600 william.sholten@jpmorgan.com	GMAC Mortgage, LLC	Custodial

Privileged and Confidential

Exhibit B - Bank Accounts

Ref #	Account Number	Bank	Address	Contact	Corporate/Company Code	Account Type
861	1095330	JPMORGAN CHASE BANK, N.A.	3rd First National Plaza Chicago, IL 60602	William Sholten 312-732-4600 william.sholten@jpmorgan.com	GMAC Mortgage, LLC	Custodial
862	1095405	JPMORGAN CHASE BANK, N.A.	3rd First National Plaza Chicago, IL 60602	William Sholten 312-732-4600 william.sholten@jpmorgan.com	GMAC Mortgage, LLC	Custodial
863	1095413	JPMORGAN CHASE BANK, N.A.	3rd First National Plaza Chicago, IL 60602	William Sholten 312-732-4600 william.sholten@jpmorgan.com	GMAC Mortgage, LLC	Custodial
864	1095421	JPMORGAN CHASE BANK, N.A.	3rd First National Plaza Chicago, IL 60602	William Sholten 312-732-4600 william.sholten@jpmorgan.com	GMAC Mortgage, LLC	Custodial
865	1095462	JPMORGAN CHASE BANK, N.A.	3rd First National Plaza Chicago, IL 60602	William Sholten 312-732-4600 william.sholten@jpmorgan.com	GMAC Mortgage, LLC	Custodial
866	1095488	JPMORGAN CHASE BANK, N.A.	3rd First National Plaza Chicago, IL 60602	William Sholten 312-732-4600 william.sholten@jpmorgan.com	GMAC Mortgage, LLC	Custodial
867	1095538	JPMORGAN CHASE BANK, N.A.	3rd First National Plaza Chicago, IL 60602	William Sholten 312-732-4600 william.sholten@jpmorgan.com	GMAC Mortgage, LLC	Custodial
868	1095678	JPMORGAN CHASE BANK, N.A.	3rd First National Plaza Chicago, IL 60602	William Sholten 312-732-4600 william.sholten@jpmorgan.com	GMAC Mortgage, LLC	Custodial
869	1095694	JPMORGAN CHASE BANK, N.A.	3rd First National Plaza Chicago, IL 60602	William Sholten 312-732-4600 william.sholten@jpmorgan.com	GMAC Mortgage, LLC	Custodial
870	1097286	JPMORGAN CHASE BANK, N.A.	3rd First National Plaza Chicago, IL 60602	William Sholten 312-732-4600 william.sholten@jpmorgan.com	Residential Funding Company, LLC	Operating - Collection
871	1099928	JPMORGAN CHASE BANK, N.A.	3rd First National Plaza Chicago, IL 60602	William Sholten 312-732-4600 william.sholten@jpmorgan.com	Residential Funding Company, LLC	Operating - Concentration
872	1102813	JPMORGAN CHASE BANK, N.A.	3rd First National Plaza Chicago, IL 60602	William Sholten 312-732-4600 william.sholten@jpmorgan.com	GMAC Mortgage, LLC	Custodial
873	1102821	JPMORGAN CHASE BANK, N.A.	3rd First National Plaza Chicago, IL 60602	William Sholten 312-732-4600 william.sholten@jpmorgan.com	GMAC Mortgage, LLC	Custodial
874	1102862	JPMORGAN CHASE BANK, N.A.	3rd First National Plaza Chicago, IL 60602	William Sholten 312-732-4600 william.sholten@jpmorgan.com	GMAC Mortgage, LLC	Custodial
875	1102888	JPMORGAN CHASE BANK, N.A.	3rd First National Plaza Chicago, IL 60602	William Sholten 312-732-4600 william.sholten@jpmorgan.com	GMAC Mortgage, LLC	Custodial
876	1102896	JPMORGAN CHASE BANK, N.A.	3rd First National Plaza Chicago, IL 60602	William Sholten 312-732-4600 william.sholten@jpmorgan.com	GMAC Mortgage, LLC	Custodial
877	1102912	JPMORGAN CHASE BANK, N.A.	3rd First National Plaza Chicago, IL 60602	William Sholten 312-732-4600 william.sholten@jpmorgan.com	GMAC Mortgage, LLC	Custodial
878	1103035	JPMORGAN CHASE BANK, N.A.	3rd First National Plaza Chicago, IL 60602	William Sholten 312-732-4600 william.sholten@jpmorgan.com	GMAC Mortgage, LLC	Custodial
879	1103068	JPMORGAN CHASE BANK, N.A.	3rd First National Plaza Chicago, IL 60602	William Sholten 312-732-4600 william.sholten@jpmorgan.com	GMAC Mortgage, LLC	Custodial
880	1103084	JPMORGAN CHASE BANK, N.A.	3rd First National Plaza Chicago, IL 60602	William Sholten 312-732-4600 william.sholten@jpmorgan.com	GMAC Mortgage, LLC	Custodial
881	1103092	JPMORGAN CHASE BANK, N.A.	3rd First National Plaza Chicago, IL 60602	William Sholten 312-732-4600 william.sholten@jpmorgan.com	GMAC Mortgage, LLC	Custodial
882	1103100	JPMORGAN CHASE BANK, N.A.	3rd First National Plaza Chicago, IL 60602	William Sholten 312-732-4600 william.sholten@jpmorgan.com	GMAC Mortgage, LLC	Custodial
883	1103118	JPMORGAN CHASE BANK, N.A.	3rd First National Plaza Chicago, IL 60602	William Sholten 312-732-4600 william.sholten@jpmorgan.com	GMAC Mortgage, LLC	Custodial
884	1103134	JPMORGAN CHASE BANK, N.A.	3rd First National Plaza Chicago, IL 60602	William Sholten 312-732-4600 william.sholten@jpmorgan.com	GMAC Mortgage, LLC	Custodial
885	1103142	JPMORGAN CHASE BANK, N.A.	3rd First National Plaza Chicago, IL 60602	William Sholten 312-732-4600 william.sholten@jpmorgan.com	GMAC Mortgage, LLC	Custodial
886	1103209	JPMORGAN CHASE BANK, N.A.	3rd First National Plaza Chicago, IL 60602	William Sholten 312-732-4600 william.sholten@jpmorgan.com	GMAC Mortgage, LLC	Custodial
887	1103613	JPMORGAN CHASE BANK, N.A.	3rd First National Plaza Chicago, IL 60602	William Sholten 312-732-4600 william.sholten@jpmorgan.com	Residential Funding Company, LLC	Operating - Concentration
888	1122688	JPMORGAN CHASE BANK, N.A.	3rd First National Plaza Chicago, IL 60602	William Sholten 312-732-4600 william.sholten@jpmorgan.com	GMAC Mortgage, LLC	Custodial
889	1122696	JPMORGAN CHASE BANK, N.A.	3rd First National Plaza Chicago, IL 60602	William Sholten 312-732-4600 william.sholten@jpmorgan.com	GMAC Mortgage, LLC	Custodial
890	1122720	JPMORGAN CHASE BANK, N.A.	3rd First National Plaza Chicago, IL 60602	William Sholten 312-732-4600 william.sholten@jpmorgan.com	GMAC Mortgage, LLC	Custodial
891	1122753	JPMORGAN CHASE BANK, N.A.	3rd First National Plaza Chicago, IL 60602	William Sholten 312-732-4600 william.sholten@jpmorgan.com	GMAC Mortgage, LLC	Custodial
892	1134675	JPMORGAN CHASE BANK, N.A.	3rd First National Plaza Chicago, IL 60602	William Sholten 312-732-4600 william.sholten@jpmorgan.com	Residential Funding Company, LLC	Operating - General
893	5113180	JPMORGAN CHASE BANK, N.A.	3rd First National Plaza Chicago, IL 60602	William Sholten 312-732-4600 william.sholten@jpmorgan.com	Homecomings Financial, LLC	Operating - Collection
894	5121418	JPMORGAN CHASE BANK, N.A.	3rd First National Plaza Chicago, IL 60602	William Sholten 312-732-4600 william.sholten@jpmorgan.com	Residential Funding Mortgage Exchange, LLC	Operating - Other
895	5130298	JPMORGAN CHASE BANK, N.A.	3rd First National Plaza Chicago, IL 60602	William Sholten 312-732-4600 william.sholten@jpmorgan.com	GMAC Mortgage, LLC	Custodial
896	5131448	JPMORGAN CHASE BANK, N.A.	3rd First National Plaza Chicago, IL 60602	William Sholten 312-732-4600 william.sholten@jpmorgan.com	GMAC Mortgage, LLC	Custodial
897	5133017	JPMORGAN CHASE BANK, N.A.	3rd First National Plaza Chicago, IL 60602	William Sholten 312-732-4600 william.sholten@jpmorgan.com	GMAC Mortgage, LLC	Custodial
898	5147409	JPMORGAN CHASE BANK, N.A.	3rd First National Plaza Chicago, IL 60602	William Sholten 312-732-4600 william.sholten@jpmorgan.com	GMAC Mortgage, LLC	Custodial
899	5147425	JPMORGAN CHASE BANK, N.A.	3rd First National Plaza Chicago, IL 60602	William Sholten 312-732-4600 william.sholten@jpmorgan.com	GMAC Mortgage, LLC	Custodial
900	5147441	JPMORGAN CHASE BANK, N.A.	3rd First National Plaza Chicago, IL 60602	William Sholten 312-732-4600 william.sholten@jpmorgan.com	GMAC Mortgage, LLC	Custodial
901	5151821	JPMORGAN CHASE BANK, N.A.	3rd First National Plaza Chicago, IL 60602	William Sholten 312-732-4600 william.sholten@jpmorgan.com	GMAC Mortgage, LLC	Custodial
902	5151902	JPMORGAN CHASE BANK, N.A.	3rd First National Plaza Chicago, IL 60602	William Sholten 312-732-4600 william.sholten@jpmorgan.com	GMAC Mortgage, LLC	Custodial
903	5151910	JPMORGAN CHASE BANK, N.A.	3rd First National Plaza Chicago, IL 60602	William Sholten 312-732-4600 william.sholten@jpmorgan.com	GMAC Mortgage, LLC	Custodial

Privileged and Confidential

Exhibit B - Bank Accounts

Ref #	Account Number	Bank	Address	Contact	Corporate/Company Code	Account Type
904	5151953	JPMORGAN CHASE BANK, N.A.	3rd First National Plaza Chicago, IL 60602	William Sholten 312-732-4600 william.sholten@jpmorgan.com	GMAC Mortgage, LLC	Custodial
905	5218640	JPMORGAN CHASE BANK, N.A.	3rd First National Plaza Chicago, IL 60602	William Sholten 312-732-4600 william.sholten@jpmorgan.com	Residential Funding Company, LLC	Operating - Other
906	5218659	JPMORGAN CHASE BANK, N.A.	3rd First National Plaza Chicago, IL 60602	William Sholten 312-732-4600 william.sholten@jpmorgan.com	Residential Funding Company, LLC	Operating - Concentration
907	5218667	JPMORGAN CHASE BANK, N.A.	3rd First National Plaza Chicago, IL 60602	William Sholten 312-732-4600 william.sholten@jpmorgan.com	Residential Funding Company, LLC	Operating - Concentration
908	5225493	JPMORGAN CHASE BANK, N.A.	3rd First National Plaza Chicago, IL 60602	William Sholten 312-732-4600 william.sholten@jpmorgan.com	Residential Funding Company, LLC	Operating - Concentration
909	5315476	JPMORGAN CHASE BANK, N.A.	3rd First National Plaza Chicago, IL 60602	William Sholten 312-732-4600 william.sholten@jpmorgan.com	Residential Funding Company, LLC	Operating - Concentration
910	5512824	JPMORGAN CHASE BANK, N.A.	3rd First National Plaza Chicago, IL 60602	William Sholten 312-732-4600 william.sholten@jpmorgan.com	Residential Funding Company, LLC	Custodial
911	5531225	JPMORGAN CHASE BANK, N.A.	3rd First National Plaza Chicago, IL 60602	William Sholten 312-732-4600 william.sholten@jpmorgan.com	Residential Funding Company, LLC	Operating - General
912	5581966	JPMORGAN CHASE BANK, N.A.	3rd First National Plaza Chicago, IL 60602	William Sholten 312-732-4600 william.sholten@jpmorgan.com	Residential Funding Company, LLC	Operating - General
913	5750873	JPMORGAN CHASE BANK, N.A.	3rd First National Plaza Chicago, IL 60602	William Sholten 312-732-4600 william.sholten@jpmorgan.com	Residential Funding Company, LLC	Operating - Other
914	5803322	JPMORGAN CHASE BANK, N.A.	3rd First National Plaza Chicago, IL 60602	William Sholten 312-732-4600 william.sholten@jpmorgan.com	GMAC Mortgage, LLC	Non-Operating - General
915	9241191	JPMORGAN CHASE BANK, N.A.	3rd First National Plaza Chicago, IL 60602	William Sholten 312-732-4600 william.sholten@jpmorgan.com	GMAC Mortgage, LLC	Custodial
916	9241213	JPMORGAN CHASE BANK, N.A.	3rd First National Plaza Chicago, IL 60602	William Sholten 312-732-4600 william.sholten@jpmorgan.com	GMAC Mortgage, LLC	Custodial
917	9241221	JPMORGAN CHASE BANK, N.A.	3rd First National Plaza Chicago, IL 60602	William Sholten 312-732-4600 william.sholten@jpmorgan.com	GMAC Mortgage, LLC	Custodial
918	9250670	JPMORGAN CHASE BANK, N.A.	3rd First National Plaza Chicago, IL 60602	William Sholten 312-732-4600 william.sholten@jpmorgan.com	GMAC Mortgage, LLC	Custodial
919	9250816	JPMORGAN CHASE BANK, N.A.	3rd First National Plaza Chicago, IL 60602	William Sholten 312-732-4600 william.sholten@jpmorgan.com	GMAC Mortgage, LLC	Custodial
920	9250824	JPMORGAN CHASE BANK, N.A.	3rd First National Plaza Chicago, IL 60602	William Sholten 312-732-4600 william.sholten@jpmorgan.com	GMAC Mortgage, LLC	Custodial
921	9250840	JPMORGAN CHASE BANK, N.A.	3rd First National Plaza Chicago, IL 60602	William Sholten 312-732-4600 william.sholten@jpmorgan.com	GMAC Mortgage, LLC	Custodial
922	9251235	JPMORGAN CHASE BANK, N.A.	3rd First National Plaza Chicago, IL 60602	William Sholten 312-732-4600 william.sholten@jpmorgan.com	GMAC Mortgage, LLC	Custodial
923	9251634	JPMORGAN CHASE BANK, N.A.	3rd First National Plaza Chicago, IL 60602	William Sholten 312-732-4600 william.sholten@jpmorgan.com	GMAC Mortgage, LLC	Custodial
924	9251669	JPMORGAN CHASE BANK, N.A.	3rd First National Plaza Chicago, IL 60602	William Sholten 312-732-4600 william.sholten@jpmorgan.com	GMAC Mortgage, LLC	Custodial
925	9251723	JPMORGAN CHASE BANK, N.A.	3rd First National Plaza Chicago, IL 60602	William Sholten 312-732-4600 william.sholten@jpmorgan.com	GMAC Mortgage, LLC	Custodial
926	9251766	JPMORGAN CHASE BANK, N.A.	3rd First National Plaza Chicago, IL 60602	William Sholten 312-732-4600 william.sholten@jpmorgan.com	GMAC Mortgage, LLC	Custodial
927	9251774	JPMORGAN CHASE BANK, N.A.	3rd First National Plaza Chicago, IL 60602	William Sholten 312-732-4600 william.sholten@jpmorgan.com	GMAC Mortgage, LLC	Custodial
928	9251782	JPMORGAN CHASE BANK, N.A.	3rd First National Plaza Chicago, IL 60602	William Sholten 312-732-4600 william.sholten@jpmorgan.com	GMAC Mortgage, LLC	Custodial
929	29553194	JPMORGAN CHASE BANK, N.A.	3rd First National Plaza Chicago, IL 60602	William Sholten 312-732-4600 william.sholten@jpmorgan.com	GMAC Mortgage, LLC	Custodial
930	85070241	JPMORGAN CHASE BANK, N.A.	3rd First National Plaza Chicago, IL 60602	William Sholten 312-732-4600 william.sholten@jpmorgan.com	GMAC Mortgage, LLC	Custodial
931	323037410	JPMORGAN CHASE BANK, N.A.	3rd First National Plaza Chicago, IL 60602	William Sholten 312-732-4600 william.sholten@jpmorgan.com	Residential Funding Company, LLC	Operating - Other
932	636519837	JPMORGAN CHASE BANK, N.A.	3rd First National Plaza Chicago, IL 60602	William Sholten 312-732-4600 william.sholten@jpmorgan.com	GMAC Mortgage, LLC	Custodial
933	644597320	JPMORGAN CHASE BANK, N.A.	3rd First National Plaza Chicago, IL 60602	William Sholten 312-732-4600 william.sholten@jpmorgan.com	GMAC Mortgage, LLC	Custodial
934	644597346	JPMORGAN CHASE BANK, N.A.	3rd First National Plaza Chicago, IL 60602	William Sholten 312-732-4600 william.sholten@jpmorgan.com	GMAC Mortgage, LLC	Custodial
935	644597353	JPMORGAN CHASE BANK, N.A.	3rd First National Plaza Chicago, IL 60602	William Sholten 312-732-4600 william.sholten@jpmorgan.com	GMAC Mortgage, LLC	Custodial
936	644597361	JPMORGAN CHASE BANK, N.A.	3rd First National Plaza Chicago, IL 60602	William Sholten 312-732-4600 william.sholten@jpmorgan.com	GMAC Mortgage, LLC	Custodial
937	644597379	JPMORGAN CHASE BANK, N.A.	3rd First National Plaza Chicago, IL 60602	William Sholten 312-732-4600 william.sholten@jpmorgan.com	GMAC Mortgage, LLC	Custodial
938	644597395	JPMORGAN CHASE BANK, N.A.	3rd First National Plaza Chicago, IL 60602	William Sholten 312-732-4600 william.sholten@jpmorgan.com	GMAC Mortgage, LLC	Custodial
939	644597411	JPMORGAN CHASE BANK, N.A.	3rd First National Plaza Chicago, IL 60602	William Sholten 312-732-4600 william.sholten@jpmorgan.com	GMAC Mortgage, LLC	Custodial
940	644597445	JPMORGAN CHASE BANK, N.A.	3rd First National Plaza Chicago, IL 60602	William Sholten 312-732-4600 william.sholten@jpmorgan.com	GMAC Mortgage, LLC	Non-Operating - Disbursement
941	644597452	JPMORGAN CHASE BANK, N.A.	3rd First National Plaza Chicago, IL 60602	William Sholten 312-732-4600 william.sholten@jpmorgan.com	GMAC Mortgage, LLC	Custodial
942	644597460	JPMORGAN CHASE BANK, N.A.	3rd First National Plaza Chicago, IL 60602	William Sholten 312-732-4600 william.sholten@jpmorgan.com	GMAC Mortgage, LLC	Custodial
943	644597494	JPMORGAN CHASE BANK, N.A.	3rd First National Plaza Chicago, IL 60602	William Sholten 312-732-4600 william.sholten@jpmorgan.com	GMAC Mortgage, LLC	Custodial
944	644597502	JPMORGAN CHASE BANK, N.A.	3rd First National Plaza Chicago, IL 60602	William Sholten 312-732-4600 william.sholten@jpmorgan.com	GMAC Mortgage, LLC	Custodial
945	644597510	JPMORGAN CHASE BANK, N.A.	3rd First National Plaza Chicago, IL 60602	William Sholten 312-732-4600 william.sholten@jpmorgan.com	GMAC Mortgage, LLC	Custodial
946	644597528	JPMORGAN CHASE BANK, N.A.	3rd First National Plaza Chicago, IL 60602	William Sholten 312-732-4600 william.sholten@jpmorgan.com	GMAC Mortgage, LLC	Custodial

Privileged and Confidential

Exhibit B - Bank Accounts

Ref #	Account Number	Bank	Address	Contact	Corporate/Company Code	Account Type
947	644597536	JPMORGAN CHASE BANK, N.A.	3rd First National Plaza Chicago, IL 60602	William Sholten 312-732-4600 william.sholten@jpmorgan.com	GMAC Mortgage, LLC	Custodial
948	644597551	JPMORGAN CHASE BANK, N.A.	3rd First National Plaza Chicago, IL 60602	William Sholten 312-732-4600 william.sholten@jpmorgan.com	GMAC Mortgage, LLC	Custodial
949	644597577	JPMORGAN CHASE BANK, N.A.	3rd First National Plaza Chicago, IL 60602	William Sholten 312-732-4600 william.sholten@jpmorgan.com	GMAC Mortgage, LLC	Custodial
950	644597585	JPMORGAN CHASE BANK, N.A.	3rd First National Plaza Chicago, IL 60602	William Sholten 312-732-4600 william.sholten@jpmorgan.com	GMAC Mortgage, LLC	Custodial
951	644597593	JPMORGAN CHASE BANK, N.A.	3rd First National Plaza Chicago, IL 60602	William Sholten 312-732-4600 william.sholten@jpmorgan.com	GMAC Mortgage, LLC	Custodial
952	644597619	JPMORGAN CHASE BANK, N.A.	3rd First National Plaza Chicago, IL 60602	William Sholten 312-732-4600 william.sholten@jpmorgan.com	GMAC Mortgage, LLC	Custodial
953	644597635	JPMORGAN CHASE BANK, N.A.	3rd First National Plaza Chicago, IL 60602	William Sholten 312-732-4600 william.sholten@jpmorgan.com	GMAC Mortgage, LLC	Custodial
954	644597643	JPMORGAN CHASE BANK, N.A.	3rd First National Plaza Chicago, IL 60602	William Sholten 312-732-4600 william.sholten@jpmorgan.com	GMAC Mortgage, LLC	Custodial
955	644597650	JPMORGAN CHASE BANK, N.A.	3rd First National Plaza Chicago, IL 60602	William Sholten 312-732-4600 william.sholten@jpmorgan.com	GMAC Mortgage, LLC	Custodial
956	644597668	JPMORGAN CHASE BANK, N.A.	3rd First National Plaza Chicago, IL 60602	William Sholten 312-732-4600 william.sholten@jpmorgan.com	GMAC Mortgage, LLC	Custodial
957	644597684	JPMORGAN CHASE BANK, N.A.	3rd First National Plaza Chicago, IL 60602	William Sholten 312-732-4600 william.sholten@jpmorgan.com	GMAC Mortgage, LLC	Custodial
958	644597700	JPMORGAN CHASE BANK, N.A.	3rd First National Plaza Chicago, IL 60602	William Sholten 312-732-4600 william.sholten@jpmorgan.com	GMAC Mortgage, LLC	Custodial
959	644597718	JPMORGAN CHASE BANK, N.A.	3rd First National Plaza Chicago, IL 60602	William Sholten 312-732-4600 william.sholten@jpmorgan.com	GMAC Mortgage, LLC	Custodial
960	644597726	JPMORGAN CHASE BANK, N.A.	3rd First National Plaza Chicago, IL 60602	William Sholten 312-732-4600 william.sholten@jpmorgan.com	GMAC Mortgage, LLC	Custodial
961	644597742	JPMORGAN CHASE BANK, N.A.	3rd First National Plaza Chicago, IL 60602	William Sholten 312-732-4600 william.sholten@jpmorgan.com	GMAC Mortgage, LLC	Custodial
962	644597767	JPMORGAN CHASE BANK, N.A.	3rd First National Plaza Chicago, IL 60602	William Sholten 312-732-4600 william.sholten@jpmorgan.com	GMAC Mortgage, LLC	Custodial
963	644597783	JPMORGAN CHASE BANK, N.A.	3rd First National Plaza Chicago, IL 60602	William Sholten 312-732-4600 william.sholten@jpmorgan.com	GMAC Mortgage, LLC	Custodial
964	644597791	JPMORGAN CHASE BANK, N.A.	3rd First National Plaza Chicago, IL 60602	William Sholten 312-732-4600 william.sholten@jpmorgan.com	GMAC Mortgage, LLC	Custodial
965	644597817	JPMORGAN CHASE BANK, N.A.	3rd First National Plaza Chicago, IL 60602	William Sholten 312-732-4600 william.sholten@jpmorgan.com	GMAC Mortgage, LLC	Custodial
966	662631035	JPMORGAN CHASE BANK, N.A.	3rd First National Plaza Chicago, IL 60602	William Sholten 312-732-4600 william.sholten@jpmorgan.com	GMAC Mortgage, LLC	Custodial
967	662631076	JPMORGAN CHASE BANK, N.A.	3rd First National Plaza Chicago, IL 60602	William Sholten 312-732-4600 william.sholten@jpmorgan.com	GMAC Mortgage, LLC	Custodial
968	662631092	JPMORGAN CHASE BANK, N.A.	3rd First National Plaza Chicago, IL 60602	William Sholten 312-732-4600 william.sholten@jpmorgan.com	GMAC Mortgage, LLC	Custodial
969	662631118	JPMORGAN CHASE BANK, N.A.	3rd First National Plaza Chicago, IL 60602	William Sholten 312-732-4600 william.sholten@jpmorgan.com	GMAC Mortgage, LLC	Custodial
970	662631175	JPMORGAN CHASE BANK, N.A.	3rd First National Plaza Chicago, IL 60602	William Sholten 312-732-4600 william.sholten@jpmorgan.com	GMAC Mortgage, LLC	Custodial
971	662631183	JPMORGAN CHASE BANK, N.A.	3rd First National Plaza Chicago, IL 60602	William Sholten 312-732-4600 william.sholten@jpmorgan.com	GMAC Mortgage, LLC	Custodial
972	662631209	JPMORGAN CHASE BANK, N.A.	3rd First National Plaza Chicago, IL 60602	William Sholten 312-732-4600 william.sholten@jpmorgan.com	GMAC Mortgage, LLC	Custodial
973	662631225	JPMORGAN CHASE BANK, N.A.	3rd First National Plaza Chicago, IL 60602	William Sholten 312-732-4600 william.sholten@jpmorgan.com	GMAC Mortgage, LLC	Custodial
974	662631241	JPMORGAN CHASE BANK, N.A.	3rd First National Plaza Chicago, IL 60602	William Sholten 312-732-4600 william.sholten@jpmorgan.com	GMAC Mortgage, LLC	Custodial
975	662631258	JPMORGAN CHASE BANK, N.A.	3rd First National Plaza Chicago, IL 60602	William Sholten 312-732-4600 william.sholten@jpmorgan.com	GMAC Mortgage, LLC	Custodial
976	662631266	JPMORGAN CHASE BANK, N.A.	3rd First National Plaza Chicago, IL 60602	William Sholten 312-732-4600 william.sholten@jpmorgan.com	GMAC Mortgage, LLC	Custodial
977	662631308	JPMORGAN CHASE BANK, N.A.	3rd First National Plaza Chicago, IL 60602	William Sholten 312-732-4600 william.sholten@jpmorgan.com	GMAC Mortgage, LLC	Custodial
978	662631316	JPMORGAN CHASE BANK, N.A.	3rd First National Plaza Chicago, IL 60602	William Sholten 312-732-4600 william.sholten@jpmorgan.com	GMAC Mortgage, LLC	Custodial
979	662631324	JPMORGAN CHASE BANK, N.A.	3rd First National Plaza Chicago, IL 60602	William Sholten 312-732-4600 william.sholten@jpmorgan.com	GMAC Mortgage, LLC	Custodial
980	662631332	JPMORGAN CHASE BANK, N.A.	3rd First National Plaza Chicago, IL 60602	William Sholten 312-732-4600 william.sholten@jpmorgan.com	GMAC Mortgage, LLC	Custodial
981	662631357	JPMORGAN CHASE BANK, N.A.	3rd First National Plaza Chicago, IL 60602	William Sholten 312-732-4600 william.sholten@jpmorgan.com	GMAC Mortgage, LLC	Custodial
982	662631365	JPMORGAN CHASE BANK, N.A.	3rd First National Plaza Chicago, IL 60602	William Sholten 312-732-4600 william.sholten@jpmorgan.com	GMAC Mortgage, LLC	Custodial
983	662631407	JPMORGAN CHASE BANK, N.A.	3rd First National Plaza Chicago, IL 60602	William Sholten 312-732-4600 william.sholten@jpmorgan.com	GMAC Mortgage, LLC	Custodial
984	662631449	JPMORGAN CHASE BANK, N.A.	3rd First National Plaza Chicago, IL 60602	William Sholten 312-732-4600 william.sholten@jpmorgan.com	GMAC Mortgage, LLC	Custodial
985	662631464	JPMORGAN CHASE BANK, N.A.	3rd First National Plaza Chicago, IL 60602	William Sholten 312-732-4600 william.sholten@jpmorgan.com	GMAC Mortgage, LLC	Custodial
986	662631480	JPMORGAN CHASE BANK, N.A.	3rd First National Plaza Chicago, IL 60602	William Sholten 312-732-4600 william.sholten@jpmorgan.com	GMAC Mortgage, LLC	Custodial
987	662631506	JPMORGAN CHASE BANK, N.A.	3rd First National Plaza Chicago, IL 60602	William Sholten 312-732-4600 william.sholten@jpmorgan.com	GMAC Mortgage, LLC	Custodial
988	662631514	JPMORGAN CHASE BANK, N.A.	3rd First National Plaza Chicago, IL 60602	William Sholten 312-732-4600 william.sholten@jpmorgan.com	GMAC Mortgage, LLC	Custodial
989	695209197	JPMORGAN CHASE BANK, N.A.	3rd First National Plaza Chicago, IL 60602	William Sholten 312-732-4600 william.sholten@jpmorgan.com	GMAC Mortgage, LLC	Custodial

Privileged and Confidential

Exhibit B - Bank Accounts

Ref #	Account Number	Bank	Address	Contact	Corporate/Company Code	Account Type
990	695209213	JPMORGAN CHASE BANK, N.A.	3rd First National Plaza Chicago, IL 60602	William Sholten 312-732-4600 william.sholten@jpmorgan.com	GMAC Mortgage, LLC	Custodial
991	695209239	JPMORGAN CHASE BANK, N.A.	3rd First National Plaza Chicago, IL 60602	William Sholten 312-732-4600 william.sholten@jpmorgan.com	GMAC Mortgage, LLC	Custodial
992	695209254	JPMORGAN CHASE BANK, N.A.	3rd First National Plaza Chicago, IL 60602	William Sholten 312-732-4600 william.sholten@jpmorgan.com	GMAC Mortgage, LLC	Custodial
993	695209270	JPMORGAN CHASE BANK, N.A.	3rd First National Plaza Chicago, IL 60602	William Sholten 312-732-4600 william.sholten@jpmorgan.com	GMAC Mortgage, LLC	Custodial
994	695209288	JPMORGAN CHASE BANK, N.A.	3rd First National Plaza Chicago, IL 60602	William Sholten 312-732-4600 william.sholten@jpmorgan.com	GMAC Mortgage, LLC	Custodial
995	695209296	JPMORGAN CHASE BANK, N.A.	3rd First National Plaza Chicago, IL 60602	William Sholten 312-732-4600 william.sholten@jpmorgan.com	GMAC Mortgage, LLC	Custodial
996	695209304	JPMORGAN CHASE BANK, N.A.	3rd First National Plaza Chicago, IL 60602	William Sholten 312-732-4600 william.sholten@jpmorgan.com	GMAC Mortgage, LLC	Custodial
997	695209312	JPMORGAN CHASE BANK, N.A.	3rd First National Plaza Chicago, IL 60602	William Sholten 312-732-4600 william.sholten@jpmorgan.com	GMAC Mortgage, LLC	Custodial
998	695209346	JPMORGAN CHASE BANK, N.A.	3rd First National Plaza Chicago, IL 60602	William Sholten 312-732-4600 william.sholten@jpmorgan.com	GMAC Mortgage, LLC	Custodial
999	695209353	JPMORGAN CHASE BANK, N.A.	3rd First National Plaza Chicago, IL 60602	William Sholten 312-732-4600 william.sholten@jpmorgan.com	GMAC Mortgage, LLC	Custodial
1000	695209387	JPMORGAN CHASE BANK, N.A.	3rd First National Plaza Chicago, IL 60602	William Sholten 312-732-4600 william.sholten@jpmorgan.com	GMAC Mortgage, LLC	Custodial
1001	695209395	JPMORGAN CHASE BANK, N.A.	3rd First National Plaza Chicago, IL 60602	William Sholten 312-732-4600 william.sholten@jpmorgan.com	GMAC Mortgage, LLC	Custodial
1002	695209411	JPMORGAN CHASE BANK, N.A.	3rd First National Plaza Chicago, IL 60602	William Sholten 312-732-4600 william.sholten@jpmorgan.com	GMAC Mortgage, LLC	Custodial
1003	695209429	JPMORGAN CHASE BANK, N.A.	3rd First National Plaza Chicago, IL 60602	William Sholten 312-732-4600 william.sholten@jpmorgan.com	GMAC Mortgage, LLC	Custodial
1004	695209445	JPMORGAN CHASE BANK, N.A.	3rd First National Plaza Chicago, IL 60602	William Sholten 312-732-4600 william.sholten@jpmorgan.com	GMAC Mortgage, LLC	Custodial
1005	695209452	JPMORGAN CHASE BANK, N.A.	3rd First National Plaza Chicago, IL 60602	William Sholten 312-732-4600 william.sholten@jpmorgan.com	GMAC Mortgage, LLC	Custodial
1006	695209486	JPMORGAN CHASE BANK, N.A.	3rd First National Plaza Chicago, IL 60602	William Sholten 312-732-4600 william.sholten@jpmorgan.com	GMAC Mortgage, LLC	Custodial
1007	695209494	JPMORGAN CHASE BANK, N.A.	3rd First National Plaza Chicago, IL 60602	William Sholten 312-732-4600 william.sholten@jpmorgan.com	GMAC Mortgage, LLC	Custodial
1008	695209502	JPMORGAN CHASE BANK, N.A.	3rd First National Plaza Chicago, IL 60602	William Sholten 312-732-4600 william.sholten@jpmorgan.com	GMAC Mortgage, LLC	Custodial
1009	695209528	JPMORGAN CHASE BANK, N.A.	3rd First National Plaza Chicago, IL 60602	William Sholten 312-732-4600 william.sholten@jpmorgan.com	GMAC Mortgage, LLC	Custodial
1010	695209536	JPMORGAN CHASE BANK, N.A.	3rd First National Plaza Chicago, IL 60602	William Sholten 312-732-4600 william.sholten@jpmorgan.com	GMAC Mortgage, LLC	Custodial
1011	695209544	JPMORGAN CHASE BANK, N.A.	3rd First National Plaza Chicago, IL 60602	William Sholten 312-732-4600 william.sholten@jpmorgan.com	GMAC Mortgage, LLC	Custodial
1012	695209551	JPMORGAN CHASE BANK, N.A.	3rd First National Plaza Chicago, IL 60602	William Sholten 312-732-4600 william.sholten@jpmorgan.com	GMAC Mortgage, LLC	Custodial
1013	695209585	JPMORGAN CHASE BANK, N.A.	3rd First National Plaza Chicago, IL 60602	William Sholten 312-732-4600 william.sholten@jpmorgan.com	GMAC Mortgage, LLC	Custodial
1014	695209593	JPMORGAN CHASE BANK, N.A.	3rd First National Plaza Chicago, IL 60602	William Sholten 312-732-4600 william.sholten@jpmorgan.com	GMAC Mortgage, LLC	Custodial
1015	695209601	JPMORGAN CHASE BANK, N.A.	3rd First National Plaza Chicago, IL 60602	William Sholten 312-732-4600 william.sholten@jpmorgan.com	GMAC Mortgage, LLC	Custodial
1016	695209627	JPMORGAN CHASE BANK, N.A.	3rd First National Plaza Chicago, IL 60602	William Sholten 312-732-4600 william.sholten@jpmorgan.com	GMAC Mortgage, LLC	Custodial
1017	695209635	JPMORGAN CHASE BANK, N.A.	3rd First National Plaza Chicago, IL 60602	William Sholten 312-732-4600 william.sholten@jpmorgan.com	GMAC Mortgage, LLC	Custodial
1018	695209643	JPMORGAN CHASE BANK, N.A.	3rd First National Plaza Chicago, IL 60602	William Sholten 312-732-4600 william.sholten@jpmorgan.com	GMAC Mortgage, LLC	Custodial
1019	695209726	JPMORGAN CHASE BANK, N.A.	3rd First National Plaza Chicago, IL 60602	William Sholten 312-732-4600 william.sholten@jpmorgan.com	GMAC Mortgage, LLC	Custodial
1020	695209734	JPMORGAN CHASE BANK, N.A.	3rd First National Plaza Chicago, IL 60602	William Sholten 312-732-4600 william.sholten@jpmorgan.com	GMAC Mortgage, LLC	Custodial
1021	695209791	JPMORGAN CHASE BANK, N.A.	3rd First National Plaza Chicago, IL 60602	William Sholten 312-732-4600 william.sholten@jpmorgan.com	GMAC Mortgage, LLC	Custodial
1022	695209817	JPMORGAN CHASE BANK, N.A.	3rd First National Plaza Chicago, IL 60602	William Sholten 312-732-4600 william.sholten@jpmorgan.com	GMAC Mortgage, LLC	Custodial
1023	695209841	JPMORGAN CHASE BANK, N.A.	3rd First National Plaza Chicago, IL 60602	William Sholten 312-732-4600 william.sholten@jpmorgan.com	GMAC Mortgage, LLC	Custodial
1024	695209858	JPMORGAN CHASE BANK, N.A.	3rd First National Plaza Chicago, IL 60602	William Sholten 312-732-4600 william.sholten@jpmorgan.com	GMAC Mortgage, LLC	Custodial
1025	695209866	JPMORGAN CHASE BANK, N.A.	3rd First National Plaza Chicago, IL 60602	William Sholten 312-732-4600 william.sholten@jpmorgan.com	GMAC Mortgage, LLC	Custodial
1026	695209890	JPMORGAN CHASE BANK, N.A.	3rd First National Plaza Chicago, IL 60602	William Sholten 312-732-4600 william.sholten@jpmorgan.com	GMAC Mortgage, LLC	Custodial
1027	695209908	JPMORGAN CHASE BANK, N.A.	3rd First National Plaza Chicago, IL 60602	William Sholten 312-732-4600 william.sholten@jpmorgan.com	GMAC Mortgage, LLC	Custodial
1028	695209924	JPMORGAN CHASE BANK, N.A.	3rd First National Plaza Chicago, IL 60602	William Sholten 312-732-4600 william.sholten@jpmorgan.com	GMAC Mortgage, LLC	Custodial
1029	699282612	JPMORGAN CHASE BANK, N.A.	3rd First National Plaza Chicago, IL 60602	William Sholten 312-732-4600 william.sholten@jpmorgan.com	GMAC Mortgage, LLC	Custodial
1030	699282620	JPMORGAN CHASE BANK, N.A.	3rd First National Plaza Chicago, IL 60602	William Sholten 312-732-4600 william.sholten@jpmorgan.com	GMAC Mortgage, LLC	Custodial
1031	699282638	JPMORGAN CHASE BANK, N.A.	3rd First National Plaza Chicago, IL 60602	William Sholten 312-732-4600 william.sholten@jpmorgan.com	GMAC Mortgage, LLC	Custodial
1032	699282679	JPMORGAN CHASE BANK, N.A.	3rd First National Plaza Chicago, IL 60602	William Sholten 312-732-4600 william.sholten@jpmorgan.com	GMAC Mortgage, LLC	Custodial

Privileged and Confidential

Exhibit B - Bank Accounts

Ref #	Account Number	Bank	Address	Contact	Corporate/Company Code	Account Type
1033	699282703	JPMORGAN CHASE BANK, N.A.	3rd First National Plaza Chicago, IL 60602	William Sholten 312-732-4600 william.sholten@jpmorgan.com	GMAC Mortgage, LLC	Custodial
1034	699282729	JPMORGAN CHASE BANK, N.A.	3rd First National Plaza Chicago, IL 60602	William Sholten 312-732-4600 william.sholten@jpmorgan.com	GMAC Mortgage, LLC	Custodial
1035	699282752	JPMORGAN CHASE BANK, N.A.	3rd First National Plaza Chicago, IL 60602	William Sholten 312-732-4600 william.sholten@jpmorgan.com	GMAC Mortgage, LLC	Custodial
1036	699282760	JPMORGAN CHASE BANK, N.A.	3rd First National Plaza Chicago, IL 60602	William Sholten 312-732-4600 william.sholten@jpmorgan.com	GMAC Mortgage, LLC	Custodial
1037	699282778	JPMORGAN CHASE BANK, N.A.	3rd First National Plaza Chicago, IL 60602	William Sholten 312-732-4600 william.sholten@jpmorgan.com	GMAC Mortgage, LLC	Custodial
1038	699282786	JPMORGAN CHASE BANK, N.A.	3rd First National Plaza Chicago, IL 60602	William Sholten 312-732-4600 william.sholten@jpmorgan.com	GMAC Mortgage, LLC	Custodial
1039	699282794	JPMORGAN CHASE BANK, N.A.	3rd First National Plaza Chicago, IL 60602	William Sholten 312-732-4600 william.sholten@jpmorgan.com	GMAC Mortgage, LLC	Custodial
1040	699282802	JPMORGAN CHASE BANK, N.A.	3rd First National Plaza Chicago, IL 60602	William Sholten 312-732-4600 william.sholten@jpmorgan.com	GMAC Mortgage, LLC	Custodial
1041	699282810	JPMORGAN CHASE BANK, N.A.	3rd First National Plaza Chicago, IL 60602	William Sholten 312-732-4600 william.sholten@jpmorgan.com	GMAC Mortgage, LLC	Custodial
1042	699282828	JPMORGAN CHASE BANK, N.A.	3rd First National Plaza Chicago, IL 60602	William Sholten 312-732-4600 william.sholten@jpmorgan.com	GMAC Mortgage, LLC	Custodial
1043	699282836	JPMORGAN CHASE BANK, N.A.	3rd First National Plaza Chicago, IL 60602	William Sholten 312-732-4600 william.sholten@jpmorgan.com	GMAC Mortgage, LLC	Custodial
1044	699282869	JPMORGAN CHASE BANK, N.A.	3rd First National Plaza Chicago, IL 60602	William Sholten 312-732-4600 william.sholten@jpmorgan.com	GMAC Mortgage, LLC	Custodial
1045	699282877	JPMORGAN CHASE BANK, N.A.	3rd First National Plaza Chicago, IL 60602	William Sholten 312-732-4600 william.sholten@jpmorgan.com	GMAC Mortgage, LLC	Custodial
1046	699282885	JPMORGAN CHASE BANK, N.A.	3rd First National Plaza Chicago, IL 60602	William Sholten 312-732-4600 william.sholten@jpmorgan.com	GMAC Mortgage, LLC	Custodial
1047	699282893	JPMORGAN CHASE BANK, N.A.	3rd First National Plaza Chicago, IL 60602	William Sholten 312-732-4600 william.sholten@jpmorgan.com	GMAC Mortgage, LLC	Custodial
1048	699282901	JPMORGAN CHASE BANK, N.A.	3rd First National Plaza Chicago, IL 60602	William Sholten 312-732-4600 william.sholten@jpmorgan.com	GMAC Mortgage, LLC	Custodial
1049	699282927	JPMORGAN CHASE BANK, N.A.	3rd First National Plaza Chicago, IL 60602	William Sholten 312-732-4600 william.sholten@jpmorgan.com	GMAC Mortgage, LLC	Custodial
1050	699282935	JPMORGAN CHASE BANK, N.A.	3rd First National Plaza Chicago, IL 60602	William Sholten 312-732-4600 william.sholten@jpmorgan.com	GMAC Mortgage, LLC	Custodial
1051	699282943	JPMORGAN CHASE BANK, N.A.	3rd First National Plaza Chicago, IL 60602	William Sholten 312-732-4600 william.sholten@jpmorgan.com	GMAC Mortgage, LLC	Custodial
1052	699282950	JPMORGAN CHASE BANK, N.A.	3rd First National Plaza Chicago, IL 60602	William Sholten 312-732-4600 william.sholten@jpmorgan.com	GMAC Mortgage, LLC	Custodial
1053	699282968	JPMORGAN CHASE BANK, N.A.	3rd First National Plaza Chicago, IL 60602	William Sholten 312-732-4600 william.sholten@jpmorgan.com	GMAC Mortgage, LLC	Custodial
1054	699282976	JPMORGAN CHASE BANK, N.A.	3rd First National Plaza Chicago, IL 60602	William Sholten 312-732-4600 william.sholten@jpmorgan.com	GMAC Mortgage, LLC	Custodial
1055	699282984	JPMORGAN CHASE BANK, N.A.	3rd First National Plaza Chicago, IL 60602	William Sholten 312-732-4600 william.sholten@jpmorgan.com	GMAC Mortgage, LLC	Custodial
1056	699283008	JPMORGAN CHASE BANK, N.A.	3rd First National Plaza Chicago, IL 60602	William Sholten 312-732-4600 william.sholten@jpmorgan.com	GMAC Mortgage, LLC	Custodial
1057	699283016	JPMORGAN CHASE BANK, N.A.	3rd First National Plaza Chicago, IL 60602	William Sholten 312-732-4600 william.sholten@jpmorgan.com	GMAC Mortgage, LLC	Custodial
1058	699283024	JPMORGAN CHASE BANK, N.A.	3rd First National Plaza Chicago, IL 60602	William Sholten 312-732-4600 william.sholten@jpmorgan.com	GMAC Mortgage, LLC	Custodial
1059	699283032	JPMORGAN CHASE BANK, N.A.	3rd First National Plaza Chicago, IL 60602	William Sholten 312-732-4600 william.sholten@jpmorgan.com	GMAC Mortgage, LLC	Custodial
1060	699283040	JPMORGAN CHASE BANK, N.A.	3rd First National Plaza Chicago, IL 60602	William Sholten 312-732-4600 william.sholten@jpmorgan.com	GMAC Mortgage, LLC	Custodial
1061	699283057	JPMORGAN CHASE BANK, N.A.	3rd First National Plaza Chicago, IL 60602	William Sholten 312-732-4600 william.sholten@jpmorgan.com	GMAC Mortgage, LLC	Custodial
1062	699283081	JPMORGAN CHASE BANK, N.A.	3rd First National Plaza Chicago, IL 60602	William Sholten 312-732-4600 william.sholten@jpmorgan.com	GMAC Mortgage, LLC	Custodial
1063	699283099	JPMORGAN CHASE BANK, N.A.	3rd First National Plaza Chicago, IL 60602	William Sholten 312-732-4600 william.sholten@jpmorgan.com	GMAC Mortgage, LLC	Custodial
1064	699283107	JPMORGAN CHASE BANK, N.A.	3rd First National Plaza Chicago, IL 60602	William Sholten 312-732-4600 william.sholten@jpmorgan.com	GMAC Mortgage, LLC	Custodial
1065	699283123	JPMORGAN CHASE BANK, N.A.	3rd First National Plaza Chicago, IL 60602	William Sholten 312-732-4600 william.sholten@jpmorgan.com	GMAC Mortgage, LLC	Custodial
1066	699283156	JPMORGAN CHASE BANK, N.A.	3rd First National Plaza Chicago, IL 60602	William Sholten 312-732-4600 william.sholten@jpmorgan.com	GMAC Mortgage, LLC	Custodial
1067	699283164	JPMORGAN CHASE BANK, N.A.	3rd First National Plaza Chicago, IL 60602	William Sholten 312-732-4600 william.sholten@jpmorgan.com	GMAC Mortgage, LLC	Custodial
1068	699283172	JPMORGAN CHASE BANK, N.A.	3rd First National Plaza Chicago, IL 60602	William Sholten 312-732-4600 william.sholten@jpmorgan.com	GMAC Mortgage, LLC	Custodial
1069	699283180	JPMORGAN CHASE BANK, N.A.	3rd First National Plaza Chicago, IL 60602	William Sholten 312-732-4600 william.sholten@jpmorgan.com	GMAC Mortgage, LLC	Custodial
1070	699283198	JPMORGAN CHASE BANK, N.A.	3rd First National Plaza Chicago, IL 60602	William Sholten 312-732-4600 william.sholten@jpmorgan.com	GMAC Mortgage, LLC	Custodial
1071	699283206	JPMORGAN CHASE BANK, N.A.	3rd First National Plaza Chicago, IL 60602	William Sholten 312-732-4600 william.sholten@jpmorgan.com	GMAC Mortgage, LLC	Custodial
1072	699283214	JPMORGAN CHASE BANK, N.A.	3rd First National Plaza Chicago, IL 60602	William Sholten 312-732-4600 william.sholten@jpmorgan.com	GMAC Mortgage, LLC	Custodial
1073	699283222	JPMORGAN CHASE BANK, N.A.	3rd First National Plaza Chicago, IL 60602	William Sholten 312-732-4600 william.sholten@jpmorgan.com	GMAC Mortgage, LLC	Custodial
1074	699283230	JPMORGAN CHASE BANK, N.A.	3rd First National Plaza Chicago, IL 60602	William Sholten 312-732-4600 william.sholten@jpmorgan.com	GMAC Mortgage, LLC	Custodial
1075	699283248	JPMORGAN CHASE BANK, N.A.	3rd First National Plaza Chicago, IL 60602	William Sholten 312-732-4600 william.sholten@jpmorgan.com	GMAC Mortgage, LLC	Custodial

Privileged and Confidential

Exhibit B - Bank Accounts

Ref #	Account Number	Bank	Address	Contact	Corporate/Company Code	Account Type
1076	699283255	JPMORGAN CHASE BANK, N.A.	3rd First National Plaza Chicago, IL 60602	William Sholten 312-732-4600 william.sholten@jpmorgan.com	GMAC Mortgage, LLC	Custodial
1077	699283263	JPMORGAN CHASE BANK, N.A.	3rd First National Plaza Chicago, IL 60602	William Sholten 312-732-4600 william.sholten@jpmorgan.com	GMAC Mortgage, LLC	Custodial
1078	699283289	JPMORGAN CHASE BANK, N.A.	3rd First National Plaza Chicago, IL 60602	William Sholten 312-732-4600 william.sholten@jpmorgan.com	GMAC Mortgage, LLC	Custodial
1079	699283297	JPMORGAN CHASE BANK, N.A.	3rd First National Plaza Chicago, IL 60602	William Sholten 312-732-4600 william.sholten@jpmorgan.com	GMAC Mortgage, LLC	Custodial
1080	699283305	JPMORGAN CHASE BANK, N.A.	3rd First National Plaza Chicago, IL 60602	William Sholten 312-732-4600 william.sholten@jpmorgan.com	GMAC Mortgage, LLC	Custodial
1081	701329666	JPMORGAN CHASE BANK, N.A.	3rd First National Plaza Chicago, IL 60602	William Sholten 312-732-4600 william.sholten@jpmorgan.com	GMAC Mortgage, LLC	Custodial
1082	701329674	JPMORGAN CHASE BANK, N.A.	3rd First National Plaza Chicago, IL 60602	William Sholten 312-732-4600 william.sholten@jpmorgan.com	GMAC Mortgage, LLC	Custodial
1083	701329682	JPMORGAN CHASE BANK, N.A.	3rd First National Plaza Chicago, IL 60602	William Sholten 312-732-4600 william.sholten@jpmorgan.com	GMAC Mortgage, LLC	Custodial
1084	701329690	JPMORGAN CHASE BANK, N.A.	3rd First National Plaza Chicago, IL 60602	William Sholten 312-732-4600 william.sholten@jpmorgan.com	GMAC Mortgage, LLC	Custodial
1085	701329724	JPMORGAN CHASE BANK, N.A.	3rd First National Plaza Chicago, IL 60602	William Sholten 312-732-4600 william.sholten@jpmorgan.com	GMAC Mortgage, LLC	Custodial
1086	701329732	JPMORGAN CHASE BANK, N.A.	3rd First National Plaza Chicago, IL 60602	William Sholten 312-732-4600 william.sholten@jpmorgan.com	GMAC Mortgage, LLC	Custodial
1087	701329740	JPMORGAN CHASE BANK, N.A.	3rd First National Plaza Chicago, IL 60602	William Sholten 312-732-4600 william.sholten@jpmorgan.com	GMAC Mortgage, LLC	Custodial
1088	701329757	JPMORGAN CHASE BANK, N.A.	3rd First National Plaza Chicago, IL 60602	William Sholten 312-732-4600 william.sholten@jpmorgan.com	GMAC Mortgage, LLC	Custodial
1089	701329765	JPMORGAN CHASE BANK, N.A.	3rd First National Plaza Chicago, IL 60602	William Sholten 312-732-4600 william.sholten@jpmorgan.com	GMAC Mortgage, LLC	Custodial
1090	701329773	JPMORGAN CHASE BANK, N.A.	3rd First National Plaza Chicago, IL 60602	William Sholten 312-732-4600 william.sholten@jpmorgan.com	GMAC Mortgage, LLC	Custodial
1091	701329781	JPMORGAN CHASE BANK, N.A.	3rd First National Plaza Chicago, IL 60602	William Sholten 312-732-4600 william.sholten@jpmorgan.com	GMAC Mortgage, LLC	Custodial
1092	701329799	JPMORGAN CHASE BANK, N.A.	3rd First National Plaza Chicago, IL 60602	William Sholten 312-732-4600 william.sholten@jpmorgan.com	GMAC Mortgage, LLC	Custodial
1093	701329807	JPMORGAN CHASE BANK, N.A.	3rd First National Plaza Chicago, IL 60602	William Sholten 312-732-4600 william.sholten@jpmorgan.com	GMAC Mortgage, LLC	Custodial
1094	701329815	JPMORGAN CHASE BANK, N.A.	3rd First National Plaza Chicago, IL 60602	William Sholten 312-732-4600 william.sholten@jpmorgan.com	GMAC Mortgage, LLC	Custodial
1095	701329823	JPMORGAN CHASE BANK, N.A.	3rd First National Plaza Chicago, IL 60602	William Sholten 312-732-4600 william.sholten@jpmorgan.com	GMAC Mortgage, LLC	Custodial
1096	701329831	JPMORGAN CHASE BANK, N.A.	3rd First National Plaza Chicago, IL 60602	William Sholten 312-732-4600 william.sholten@jpmorgan.com	GMAC Mortgage, LLC	Custodial
1097	701329849	JPMORGAN CHASE BANK, N.A.	3rd First National Plaza Chicago, IL 60602	William Sholten 312-732-4600 william.sholten@jpmorgan.com	GMAC Mortgage, LLC	Custodial
1098	701329856	JPMORGAN CHASE BANK, N.A.	3rd First National Plaza Chicago, IL 60602	William Sholten 312-732-4600 william.sholten@jpmorgan.com	GMAC Mortgage, LLC	Custodial
1099	701329898	JPMORGAN CHASE BANK, N.A.	3rd First National Plaza Chicago, IL 60602	William Sholten 312-732-4600 william.sholten@jpmorgan.com	GMAC Mortgage, LLC	Custodial
1100	701329906	JPMORGAN CHASE BANK, N.A.	3rd First National Plaza Chicago, IL 60602	William Sholten 312-732-4600 william.sholten@jpmorgan.com	GMAC Mortgage, LLC	Custodial
1101	701329914	JPMORGAN CHASE BANK, N.A.	3rd First National Plaza Chicago, IL 60602	William Sholten 312-732-4600 william.sholten@jpmorgan.com	GMAC Mortgage, LLC	Custodial
1102	701329922	JPMORGAN CHASE BANK, N.A.	3rd First National Plaza Chicago, IL 60602	William Sholten 312-732-4600 william.sholten@jpmorgan.com	GMAC Mortgage, LLC	Custodial
1103	701329930	JPMORGAN CHASE BANK, N.A.	3rd First National Plaza Chicago, IL 60602	William Sholten 312-732-4600 william.sholten@jpmorgan.com	GMAC Mortgage, LLC	Custodial
1104	701329948	JPMORGAN CHASE BANK, N.A.	3rd First National Plaza Chicago, IL 60602	William Sholten 312-732-4600 william.sholten@jpmorgan.com	GMAC Mortgage, LLC	Custodial
1105	701329971	JPMORGAN CHASE BANK, N.A.	3rd First National Plaza Chicago, IL 60602	William Sholten 312-732-4600 william.sholten@jpmorgan.com	GMAC Mortgage, LLC	Custodial
1106	701329989	JPMORGAN CHASE BANK, N.A.	3rd First National Plaza Chicago, IL 60602	William Sholten 312-732-4600 william.sholten@jpmorgan.com	GMAC Mortgage, LLC	Custodial
1107	701329997	JPMORGAN CHASE BANK, N.A.	3rd First National Plaza Chicago, IL 60602	William Sholten 312-732-4600 william.sholten@jpmorgan.com	GMAC Mortgage, LLC	Custodial
1108	701330003	JPMORGAN CHASE BANK, N.A.	3rd First National Plaza Chicago, IL 60602	William Sholten 312-732-4600 william.sholten@jpmorgan.com	GMAC Mortgage, LLC	Custodial
1109	701330011	JPMORGAN CHASE BANK, N.A.	3rd First National Plaza Chicago, IL 60602	William Sholten 312-732-4600 william.sholten@jpmorgan.com	GMAC Mortgage, LLC	Custodial
1110	701330029	JPMORGAN CHASE BANK, N.A.	3rd First National Plaza Chicago, IL 60602	William Sholten 312-732-4600 william.sholten@jpmorgan.com	GMAC Mortgage, LLC	Custodial
1111	701330037	JPMORGAN CHASE BANK, N.A.	3rd First National Plaza Chicago, IL 60602	William Sholten 312-732-4600 william.sholten@jpmorgan.com	GMAC Mortgage, LLC	Custodial
1112	701330045	JPMORGAN CHASE BANK, N.A.	3rd First National Plaza Chicago, IL 60602	William Sholten 312-732-4600 william.sholten@jpmorgan.com	GMAC Mortgage, LLC	Custodial
1113	701330052	JPMORGAN CHASE BANK, N.A.	3rd First National Plaza Chicago, IL 60602	William Sholten 312-732-4600 william.sholten@jpmorgan.com	GMAC Mortgage, LLC	Custodial
1114	701330060	JPMORGAN CHASE BANK, N.A.	3rd First National Plaza Chicago, IL 60602	William Sholten 312-732-4600 william.sholten@jpmorgan.com	GMAC Mortgage, LLC	Custodial
1115	701330086	JPMORGAN CHASE BANK, N.A.	3rd First National Plaza Chicago, IL 60602	William Sholten 312-732-4600 william.sholten@jpmorgan.com	GMAC Mortgage, LLC	Custodial
1116	701330102	JPMORGAN CHASE BANK, N.A.	3rd First National Plaza Chicago, IL 60602	William Sholten 312-732-4600 william.sholten@jpmorgan.com	GMAC Mortgage, LLC	Custodial
1117	701330110	JPMORGAN CHASE BANK, N.A.	3rd First National Plaza Chicago, IL 60602	William Sholten 312-732-4600 william.sholten@jpmorgan.com	GMAC Mortgage, LLC	Custodial
1118	701330128	JPMORGAN CHASE BANK, N.A.	3rd First National Plaza Chicago, IL 60602	William Sholten 312-732-4600 william.sholten@jpmorgan.com	GMAC Mortgage, LLC	Custodial

Privileged and Confidential

Exhibit B - Bank Accounts

Ref #	Account Number	Bank	Address	Contact	Corporate/Company Code	Account Type
1119	701330144	JPMORGAN CHASE BANK, N.A.	3rd First National Plaza Chicago, IL 60602	William Sholten 312-732-4600 william.sholten@jpmorgan.com	GMAC Mortgage, LLC	Custodial
1120	701330185	JPMORGAN CHASE BANK, N.A.	3rd First National Plaza Chicago, IL 60602	William Sholten 312-732-4600 william.sholten@jpmorgan.com	GMAC Mortgage, LLC	Custodial
1121	701330201	JPMORGAN CHASE BANK, N.A.	3rd First National Plaza Chicago, IL 60602	William Sholten 312-732-4600 william.sholten@jpmorgan.com	GMAC Mortgage, LLC	Custodial
1122	701330227	JPMORGAN CHASE BANK, N.A.	3rd First National Plaza Chicago, IL 60602	William Sholten 312-732-4600 william.sholten@jpmorgan.com	GMAC Mortgage, LLC	Custodial
1123	701330235	JPMORGAN CHASE BANK, N.A.	3rd First National Plaza Chicago, IL 60602	William Sholten 312-732-4600 william.sholten@jpmorgan.com	GMAC Mortgage, LLC	Custodial
1124	701330243	JPMORGAN CHASE BANK, N.A.	3rd First National Plaza Chicago, IL 60602	William Sholten 312-732-4600 william.sholten@jpmorgan.com	GMAC Mortgage, LLC	Custodial
1125	701330268	JPMORGAN CHASE BANK, N.A.	3rd First National Plaza Chicago, IL 60602	William Sholten 312-732-4600 william.sholten@jpmorgan.com	GMAC Mortgage, LLC	Custodial
1126	701330292	JPMORGAN CHASE BANK, N.A.	3rd First National Plaza Chicago, IL 60602	William Sholten 312-732-4600 william.sholten@jpmorgan.com	GMAC Mortgage, LLC	Custodial
1127	701330326	JPMORGAN CHASE BANK, N.A.	3rd First National Plaza Chicago, IL 60602	William Sholten 312-732-4600 william.sholten@jpmorgan.com	GMAC Mortgage, LLC	Custodial
1128	701330334	JPMORGAN CHASE BANK, N.A.	3rd First National Plaza Chicago, IL 60602	William Sholten 312-732-4600 william.sholten@jpmorgan.com	GMAC Mortgage, LLC	Custodial
1129	701330367	JPMORGAN CHASE BANK, N.A.	3rd First National Plaza Chicago, IL 60602	William Sholten 312-732-4600 william.sholten@jpmorgan.com	GMAC Mortgage, LLC	Custodial
1130	701330375	JPMORGAN CHASE BANK, N.A.	3rd First National Plaza Chicago, IL 60602	William Sholten 312-732-4600 william.sholten@jpmorgan.com	GMAC Mortgage, LLC	Custodial
1131	701330383	JPMORGAN CHASE BANK, N.A.	3rd First National Plaza Chicago, IL 60602	William Sholten 312-732-4600 william.sholten@jpmorgan.com	GMAC Mortgage, LLC	Custodial
1132	701330391	JPMORGAN CHASE BANK, N.A.	3rd First National Plaza Chicago, IL 60602	William Sholten 312-732-4600 william.sholten@jpmorgan.com	GMAC Mortgage, LLC	Custodial
1133	701330409	JPMORGAN CHASE BANK, N.A.	3rd First National Plaza Chicago, IL 60602	William Sholten 312-732-4600 william.sholten@jpmorgan.com	GMAC Mortgage, LLC	Custodial
1134	708081617	JPMORGAN CHASE BANK, N.A.	3rd First National Plaza Chicago, IL 60602	William Sholten 312-732-4600 william.sholten@jpmorgan.com	Residential Funding Company, LLC	Operating - Concentration
1135	708362330	JPMORGAN CHASE BANK, N.A.	3rd First National Plaza Chicago, IL 60602	William Sholten 312-732-4600 william.sholten@jpmorgan.com	GMAC Mortgage, LLC	Custodial
1136	708362421	JPMORGAN CHASE BANK, N.A.	3rd First National Plaza Chicago, IL 60602	William Sholten 312-732-4600 william.sholten@jpmorgan.com	GMAC Mortgage, LLC	Custodial
1137	708362439	JPMORGAN CHASE BANK, N.A.	3rd First National Plaza Chicago, IL 60602	William Sholten 312-732-4600 william.sholten@jpmorgan.com	GMAC Mortgage, LLC	Custodial
1138	708362488	JPMORGAN CHASE BANK, N.A.	3rd First National Plaza Chicago, IL 60602	William Sholten 312-732-4600 william.sholten@jpmorgan.com	GMAC Mortgage, LLC	Custodial
1139	708362496	JPMORGAN CHASE BANK, N.A.	3rd First National Plaza Chicago, IL 60602	William Sholten 312-732-4600 william.sholten@jpmorgan.com	GMAC Mortgage, LLC	Custodial
1140	708362504	JPMORGAN CHASE BANK, N.A.	3rd First National Plaza Chicago, IL 60602	William Sholten 312-732-4600 william.sholten@jpmorgan.com	GMAC Mortgage, LLC	Custodial
1141	708362512	JPMORGAN CHASE BANK, N.A.	3rd First National Plaza Chicago, IL 60602	William Sholten 312-732-4600 william.sholten@jpmorgan.com	GMAC Mortgage, LLC	Custodial
1142	708362520	JPMORGAN CHASE BANK, N.A.	3rd First National Plaza Chicago, IL 60602	William Sholten 312-732-4600 william.sholten@jpmorgan.com	GMAC Mortgage, LLC	Custodial
1143	708362538	JPMORGAN CHASE BANK, N.A.	3rd First National Plaza Chicago, IL 60602	William Sholten 312-732-4600 william.sholten@jpmorgan.com	GMAC Mortgage, LLC	Custodial
1144	708362561	JPMORGAN CHASE BANK, N.A.	3rd First National Plaza Chicago, IL 60602	William Sholten 312-732-4600 william.sholten@jpmorgan.com	GMAC Mortgage, LLC	Custodial
1145	708362579	JPMORGAN CHASE BANK, N.A.	3rd First National Plaza Chicago, IL 60602	William Sholten 312-732-4600 william.sholten@jpmorgan.com	GMAC Mortgage, LLC	Custodial
1146	708362587	JPMORGAN CHASE BANK, N.A.	3rd First National Plaza Chicago, IL 60602	William Sholten 312-732-4600 william.sholten@jpmorgan.com	GMAC Mortgage, LLC	Custodial
1147	708362611	JPMORGAN CHASE BANK, N.A.	3rd First National Plaza Chicago, IL 60602	William Sholten 312-732-4600 william.sholten@jpmorgan.com	GMAC Mortgage, LLC	Custodial
1148	708362629	JPMORGAN CHASE BANK, N.A.	3rd First National Plaza Chicago, IL 60602	William Sholten 312-732-4600 william.sholten@jpmorgan.com	GMAC Mortgage, LLC	Custodial
1149	708362637	JPMORGAN CHASE BANK, N.A.	3rd First National Plaza Chicago, IL 60602	William Sholten 312-732-4600 william.sholten@jpmorgan.com	GMAC Mortgage, LLC	Custodial
1150	708362678	JPMORGAN CHASE BANK, N.A.	3rd First National Plaza Chicago, IL 60602	William Sholten 312-732-4600 william.sholten@jpmorgan.com	GMAC Mortgage, LLC	Custodial
1151	708362694	JPMORGAN CHASE BANK, N.A.	3rd First National Plaza Chicago, IL 60602	William Sholten 312-732-4600 william.sholten@jpmorgan.com	GMAC Mortgage, LLC	Custodial
1152	708362702	JPMORGAN CHASE BANK, N.A.	3rd First National Plaza Chicago, IL 60602	William Sholten 312-732-4600 william.sholten@jpmorgan.com	GMAC Mortgage, LLC	Custodial
1153	708362736	JPMORGAN CHASE BANK, N.A.	3rd First National Plaza Chicago, IL 60602	William Sholten 312-732-4600 william.sholten@jpmorgan.com	GMAC Mortgage, LLC	Custodial
1154	708362744	JPMORGAN CHASE BANK, N.A.	3rd First National Plaza Chicago, IL 60602	William Sholten 312-732-4600 william.sholten@jpmorgan.com	GMAC Mortgage, LLC	Custodial
1155	708362751	JPMORGAN CHASE BANK, N.A.	3rd First National Plaza Chicago, IL 60602	William Sholten 312-732-4600 william.sholten@jpmorgan.com	GMAC Mortgage, LLC	Custodial
1156	708362785	JPMORGAN CHASE BANK, N.A.	3rd First National Plaza Chicago, IL 60602	William Sholten 312-732-4600 william.sholten@jpmorgan.com	GMAC Mortgage, LLC	Custodial
1157	708362819	JPMORGAN CHASE BANK, N.A.	3rd First National Plaza Chicago, IL 60602	William Sholten 312-732-4600 william.sholten@jpmorgan.com	GMAC Mortgage, LLC	Custodial
1158	708362827	JPMORGAN CHASE BANK, N.A.	3rd First National Plaza Chicago, IL 60602	William Sholten 312-732-4600 william.sholten@jpmorgan.com	GMAC Mortgage, LLC	Custodial
1159	716488903	JPMORGAN CHASE BANK, N.A.	3rd First National Plaza Chicago, IL 60602	William Sholten 312-732-4600 william.sholten@jpmorgan.com	GMAC Mortgage, LLC	Custodial
1160	716488929	JPMORGAN CHASE BANK, N.A.	3rd First National Plaza Chicago, IL 60602	William Sholten 312-732-4600 william.sholten@jpmorgan.com	GMAC Mortgage, LLC	Custodial
1161	716488945	JPMORGAN CHASE BANK, N.A.	3rd First National Plaza Chicago, IL 60602	William Sholten 312-732-4600 william.sholten@jpmorgan.com	GMAC Mortgage, LLC	Custodial

Privileged and Confidential

Exhibit B - Bank Accounts

Ref #	Account Number	Bank	Address	Contact	Corporate/Company Code	Account Type
1162	716488952	JPMORGAN CHASE BANK, N.A.	3rd First National Plaza Chicago, IL 60602	William Sholten 312-732-4600 william.sholten@jpmorgan.com	GMAC Mortgage, LLC	Custodial
1163	716488960	JPMORGAN CHASE BANK, N.A.	3rd First National Plaza Chicago, IL 60602	William Sholten 312-732-4600 william.sholten@jpmorgan.com	GMAC Mortgage, LLC	Custodial
1164	716489018	JPMORGAN CHASE BANK, N.A.	3rd First National Plaza Chicago, IL 60602	William Sholten 312-732-4600 william.sholten@jpmorgan.com	GMAC Mortgage, LLC	Custodial
1165	716489067	JPMORGAN CHASE BANK, N.A.	3rd First National Plaza Chicago, IL 60602	William Sholten 312-732-4600 william.sholten@jpmorgan.com	GMAC Mortgage, LLC	Custodial
1166	716489075	JPMORGAN CHASE BANK, N.A.	3rd First National Plaza Chicago, IL 60602	William Sholten 312-732-4600 william.sholten@jpmorgan.com	GMAC Mortgage, LLC	Custodial
1167	716489083	JPMORGAN CHASE BANK, N.A.	3rd First National Plaza Chicago, IL 60602	William Sholten 312-732-4600 william.sholten@jpmorgan.com	GMAC Mortgage, LLC	Custodial
1168	716489091	JPMORGAN CHASE BANK, N.A.	3rd First National Plaza Chicago, IL 60602	William Sholten 312-732-4600 william.sholten@jpmorgan.com	GMAC Mortgage, LLC	Custodial
1169	716489109	JPMORGAN CHASE BANK, N.A.	3rd First National Plaza Chicago, IL 60602	William Sholten 312-732-4600 william.sholten@jpmorgan.com	GMAC Mortgage, LLC	Custodial
1170	716489117	JPMORGAN CHASE BANK, N.A.	3rd First National Plaza Chicago, IL 60602	William Sholten 312-732-4600 william.sholten@jpmorgan.com	GMAC Mortgage, LLC	Custodial
1171	716489125	JPMORGAN CHASE BANK, N.A.	3rd First National Plaza Chicago, IL 60602	William Sholten 312-732-4600 william.sholten@jpmorgan.com	GMAC Mortgage, LLC	Custodial
1172	716489133	JPMORGAN CHASE BANK, N.A.	3rd First National Plaza Chicago, IL 60602	William Sholten 312-732-4600 william.sholten@jpmorgan.com	GMAC Mortgage, LLC	Custodial
1173	716489158	JPMORGAN CHASE BANK, N.A.	3rd First National Plaza Chicago, IL 60602	William Sholten 312-732-4600 william.sholten@jpmorgan.com	GMAC Mortgage, LLC	Custodial
1174	716489166	JPMORGAN CHASE BANK, N.A.	3rd First National Plaza Chicago, IL 60602	William Sholten 312-732-4600 william.sholten@jpmorgan.com	GMAC Mortgage, LLC	Custodial
1175	716489174	JPMORGAN CHASE BANK, N.A.	3rd First National Plaza Chicago, IL 60602	William Sholten 312-732-4600 william.sholten@jpmorgan.com	GMAC Mortgage, LLC	Custodial
1176	716489190	JPMORGAN CHASE BANK, N.A.	3rd First National Plaza Chicago, IL 60602	William Sholten 312-732-4600 william.sholten@jpmorgan.com	GMAC Mortgage, LLC	Custodial
1177	716489216	JPMORGAN CHASE BANK, N.A.	3rd First National Plaza Chicago, IL 60602	William Sholten 312-732-4600 william.sholten@jpmorgan.com	GMAC Mortgage, LLC	Custodial
1178	716489224	JPMORGAN CHASE BANK, N.A.	3rd First National Plaza Chicago, IL 60602	William Sholten 312-732-4600 william.sholten@jpmorgan.com	GMAC Mortgage, LLC	Custodial
1179	716489232	JPMORGAN CHASE BANK, N.A.	3rd First National Plaza Chicago, IL 60602	William Sholten 312-732-4600 william.sholten@jpmorgan.com	GMAC Mortgage, LLC	Custodial
1180	716489273	JPMORGAN CHASE BANK, N.A.	3rd First National Plaza Chicago, IL 60602	William Sholten 312-732-4600 william.sholten@jpmorgan.com	GMAC Mortgage, LLC	Custodial
1181	716489281	JPMORGAN CHASE BANK, N.A.	3rd First National Plaza Chicago, IL 60602	William Sholten 312-732-4600 william.sholten@jpmorgan.com	GMAC Mortgage, LLC	Custodial
1182	716489299	JPMORGAN CHASE BANK, N.A.	3rd First National Plaza Chicago, IL 60602	William Sholten 312-732-4600 william.sholten@jpmorgan.com	GMAC Mortgage, LLC	Custodial
1183	716489307	JPMORGAN CHASE BANK, N.A.	3rd First National Plaza Chicago, IL 60602	William Sholten 312-732-4600 william.sholten@jpmorgan.com	GMAC Mortgage, LLC	Custodial
1184	716489323	JPMORGAN CHASE BANK, N.A.	3rd First National Plaza Chicago, IL 60602	William Sholten 312-732-4600 william.sholten@jpmorgan.com	GMAC Mortgage, LLC	Custodial
1185	716489422	JPMORGAN CHASE BANK, N.A.	3rd First National Plaza Chicago, IL 60602	William Sholten 312-732-4600 william.sholten@jpmorgan.com	GMAC Mortgage, LLC	Custodial
1186	716489448	JPMORGAN CHASE BANK, N.A.	3rd First National Plaza Chicago, IL 60602	William Sholten 312-732-4600 william.sholten@jpmorgan.com	GMAC Mortgage, LLC	Custodial
1187	716489455	JPMORGAN CHASE BANK, N.A.	3rd First National Plaza Chicago, IL 60602	William Sholten 312-732-4600 william.sholten@jpmorgan.com	GMAC Mortgage, LLC	Custodial
1188	716489463	JPMORGAN CHASE BANK, N.A.	3rd First National Plaza Chicago, IL 60602	William Sholten 312-732-4600 william.sholten@jpmorgan.com	GMAC Mortgage, LLC	Custodial
1189	716489471	JPMORGAN CHASE BANK, N.A.	3rd First National Plaza Chicago, IL 60602	William Sholten 312-732-4600 william.sholten@jpmorgan.com	GMAC Mortgage, LLC	Custodial
1190	716489489	JPMORGAN CHASE BANK, N.A.	3rd First National Plaza Chicago, IL 60602	William Sholten 312-732-4600 william.sholten@jpmorgan.com	GMAC Mortgage, LLC	Custodial
1191	716489505	JPMORGAN CHASE BANK, N.A.	3rd First National Plaza Chicago, IL 60602	William Sholten 312-732-4600 william.sholten@jpmorgan.com	GMAC Mortgage, LLC	Custodial
1192	716489513	JPMORGAN CHASE BANK, N.A.	3rd First National Plaza Chicago, IL 60602	William Sholten 312-732-4600 william.sholten@jpmorgan.com	GMAC Mortgage, LLC	Custodial
1193	716489521	JPMORGAN CHASE BANK, N.A.	3rd First National Plaza Chicago, IL 60602	William Sholten 312-732-4600 william.sholten@jpmorgan.com	GMAC Mortgage, LLC	Custodial
1194	716489539	JPMORGAN CHASE BANK, N.A.	3rd First National Plaza Chicago, IL 60602	William Sholten 312-732-4600 william.sholten@jpmorgan.com	GMAC Mortgage, LLC	Custodial
1195	716489547	JPMORGAN CHASE BANK, N.A.	3rd First National Plaza Chicago, IL 60602	William Sholten 312-732-4600 william.sholten@jpmorgan.com	GMAC Mortgage, LLC	Custodial
1196	716489554	JPMORGAN CHASE BANK, N.A.	3rd First National Plaza Chicago, IL 60602	William Sholten 312-732-4600 william.sholten@jpmorgan.com	GMAC Mortgage, LLC	Custodial
1197	716489562	JPMORGAN CHASE BANK, N.A.	3rd First National Plaza Chicago, IL 60602	William Sholten 312-732-4600 william.sholten@jpmorgan.com	GMAC Mortgage, LLC	Custodial
1198	716489570	JPMORGAN CHASE BANK, N.A.	3rd First National Plaza Chicago, IL 60602	William Sholten 312-732-4600 william.sholten@jpmorgan.com	GMAC Mortgage, LLC	Custodial
1199	716489604	JPMORGAN CHASE BANK, N.A.	3rd First National Plaza Chicago, IL 60602	William Sholten 312-732-4600 william.sholten@jpmorgan.com	GMAC Mortgage, LLC	Custodial
1200	727108276	JPMORGAN CHASE BANK, N.A.	3rd First National Plaza Chicago, IL 60602	William Sholten 312-732-4600 william.sholten@jpmorgan.com	GMAC Mortgage, LLC	Custodial
1201	727108284	JPMORGAN CHASE BANK, N.A.	3rd First National Plaza Chicago, IL 60602	William Sholten 312-732-4600 william.sholten@jpmorgan.com	GMAC Mortgage, LLC	Custodial
1202	727108292	JPMORGAN CHASE BANK, N.A.	3rd First National Plaza Chicago, IL 60602	William Sholten 312-732-4600 william.sholten@jpmorgan.com	GMAC Mortgage, LLC	Custodial
1203	727108300	JPMORGAN CHASE BANK, N.A.	3rd First National Plaza Chicago, IL 60602	William Sholten 312-732-4600 william.sholten@jpmorgan.com	GMAC Mortgage, LLC	Custodial
1204	727108318	JPMORGAN CHASE BANK, N.A.	3rd First National Plaza Chicago, IL 60602	William Sholten 312-732-4600 william.sholten@jpmorgan.com	GMAC Mortgage, LLC	Custodial

Privileged and Confidential

Exhibit B - Bank Accounts

Ref #	Account Number	Bank	Address	Contact	Corporate/Company Code	Account Type
1205	727108326	JPMORGAN CHASE BANK, N.A.	3rd First National Plaza Chicago, IL 60602	William Sholten 312-732-4600 william.sholten@jpmorgan.com	GMAC Mortgage, LLC	Custodial
1206	727108342	JPMORGAN CHASE BANK, N.A.	3rd First National Plaza Chicago, IL 60602	William Sholten 312-732-4600 william.sholten@jpmorgan.com	GMAC Mortgage, LLC	Custodial
1207	727108359	JPMORGAN CHASE BANK, N.A.	3rd First National Plaza Chicago, IL 60602	William Sholten 312-732-4600 william.sholten@jpmorgan.com	GMAC Mortgage, LLC	Custodial
1208	727108383	JPMORGAN CHASE BANK, N.A.	3rd First National Plaza Chicago, IL 60602	William Sholten 312-732-4600 william.sholten@jpmorgan.com	GMAC Mortgage, LLC	Custodial
1209	727108391	JPMORGAN CHASE BANK, N.A.	3rd First National Plaza Chicago, IL 60602	William Sholten 312-732-4600 william.sholten@jpmorgan.com	GMAC Mortgage, LLC	Custodial
1210	727108409	JPMORGAN CHASE BANK, N.A.	3rd First National Plaza Chicago, IL 60602	William Sholten 312-732-4600 william.sholten@jpmorgan.com	GMAC Mortgage, LLC	Custodial
1211	727108417	JPMORGAN CHASE BANK, N.A.	3rd First National Plaza Chicago, IL 60602	William Sholten 312-732-4600 william.sholten@jpmorgan.com	GMAC Mortgage, LLC	Custodial
1212	727108466	JPMORGAN CHASE BANK, N.A.	3rd First National Plaza Chicago, IL 60602	William Sholten 312-732-4600 william.sholten@jpmorgan.com	GMAC Mortgage, LLC	Custodial
1213	727108490	JPMORGAN CHASE BANK, N.A.	3rd First National Plaza Chicago, IL 60602	William Sholten 312-732-4600 william.sholten@jpmorgan.com	GMAC Mortgage, LLC	Custodial
1214	727108508	JPMORGAN CHASE BANK, N.A.	3rd First National Plaza Chicago, IL 60602	William Sholten 312-732-4600 william.sholten@jpmorgan.com	GMAC Mortgage, LLC	Custodial
1215	727108524	JPMORGAN CHASE BANK, N.A.	3rd First National Plaza Chicago, IL 60602	William Sholten 312-732-4600 william.sholten@jpmorgan.com	GMAC Mortgage, LLC	Custodial
1216	727108532	JPMORGAN CHASE BANK, N.A.	3rd First National Plaza Chicago, IL 60602	William Sholten 312-732-4600 william.sholten@jpmorgan.com	GMAC Mortgage, LLC	Custodial
1217	727108540	JPMORGAN CHASE BANK, N.A.	3rd First National Plaza Chicago, IL 60602	William Sholten 312-732-4600 william.sholten@jpmorgan.com	GMAC Mortgage, LLC	Custodial
1218	727108573	JPMORGAN CHASE BANK, N.A.	3rd First National Plaza Chicago, IL 60602	William Sholten 312-732-4600 william.sholten@jpmorgan.com	GMAC Mortgage, LLC	Custodial
1219	727108581	JPMORGAN CHASE BANK, N.A.	3rd First National Plaza Chicago, IL 60602	William Sholten 312-732-4600 william.sholten@jpmorgan.com	GMAC Mortgage, LLC	Custodial
1220	727108615	JPMORGAN CHASE BANK, N.A.	3rd First National Plaza Chicago, IL 60602	William Sholten 312-732-4600 william.sholten@jpmorgan.com	GMAC Mortgage, LLC	Custodial
1221	727108623	JPMORGAN CHASE BANK, N.A.	3rd First National Plaza Chicago, IL 60602	William Sholten 312-732-4600 william.sholten@jpmorgan.com	GMAC Mortgage, LLC	Custodial
1222	727114241	JPMORGAN CHASE BANK, N.A.	3rd First National Plaza Chicago, IL 60602	William Sholten 312-732-4600 william.sholten@jpmorgan.com	GMAC Mortgage, LLC	Custodial
1223	727114258	JPMORGAN CHASE BANK, N.A.	3rd First National Plaza Chicago, IL 60602	William Sholten 312-732-4600 william.sholten@jpmorgan.com	GMAC Mortgage, LLC	Custodial
1224	727114266	JPMORGAN CHASE BANK, N.A.	3rd First National Plaza Chicago, IL 60602	William Sholten 312-732-4600 william.sholten@jpmorgan.com	GMAC Mortgage, LLC	Custodial
1225	727114274	JPMORGAN CHASE BANK, N.A.	3rd First National Plaza Chicago, IL 60602	William Sholten 312-732-4600 william.sholten@jpmorgan.com	GMAC Mortgage, LLC	Custodial
1226	727114407	JPMORGAN CHASE BANK, N.A.	3rd First National Plaza Chicago, IL 60602	William Sholten 312-732-4600 william.sholten@jpmorgan.com	GMAC Mortgage, LLC	Custodial
1227	727114415	JPMORGAN CHASE BANK, N.A.	3rd First National Plaza Chicago, IL 60602	William Sholten 312-732-4600 william.sholten@jpmorgan.com	GMAC Mortgage, LLC	Custodial
1228	727114423	JPMORGAN CHASE BANK, N.A.	3rd First National Plaza Chicago, IL 60602	William Sholten 312-732-4600 william.sholten@jpmorgan.com	GMAC Mortgage, LLC	Custodial
1229	727114431	JPMORGAN CHASE BANK, N.A.	3rd First National Plaza Chicago, IL 60602	William Sholten 312-732-4600 william.sholten@jpmorgan.com	GMAC Mortgage, LLC	Custodial
1230	727114506	JPMORGAN CHASE BANK, N.A.	3rd First National Plaza Chicago, IL 60602	William Sholten 312-732-4600 william.sholten@jpmorgan.com	GMAC Mortgage, LLC	Custodial
1231	727114514	JPMORGAN CHASE BANK, N.A.	3rd First National Plaza Chicago, IL 60602	William Sholten 312-732-4600 william.sholten@jpmorgan.com	GMAC Mortgage, LLC	Custodial
1232	727114522	JPMORGAN CHASE BANK, N.A.	3rd First National Plaza Chicago, IL 60602	William Sholten 312-732-4600 william.sholten@jpmorgan.com	GMAC Mortgage, LLC	Custodial
1233	727114530	JPMORGAN CHASE BANK, N.A.	3rd First National Plaza Chicago, IL 60602	William Sholten 312-732-4600 william.sholten@jpmorgan.com	GMAC Mortgage, LLC	Custodial
1234	727114548	JPMORGAN CHASE BANK, N.A.	3rd First National Plaza Chicago, IL 60602	William Sholten 312-732-4600 william.sholten@jpmorgan.com	GMAC Mortgage, LLC	Custodial
1235	727114555	JPMORGAN CHASE BANK, N.A.	3rd First National Plaza Chicago, IL 60602	William Sholten 312-732-4600 william.sholten@jpmorgan.com	GMAC Mortgage, LLC	Custodial
1236	727114589	JPMORGAN CHASE BANK, N.A.	3rd First National Plaza Chicago, IL 60602	William Sholten 312-732-4600 william.sholten@jpmorgan.com	GMAC Mortgage, LLC	Custodial
1237	727114597	JPMORGAN CHASE BANK, N.A.	3rd First National Plaza Chicago, IL 60602	William Sholten 312-732-4600 william.sholten@jpmorgan.com	GMAC Mortgage, LLC	Custodial
1238	727114605	JPMORGAN CHASE BANK, N.A.	3rd First National Plaza Chicago, IL 60602	William Sholten 312-732-4600 william.sholten@jpmorgan.com	GMAC Mortgage, LLC	Custodial
1239	727114613	JPMORGAN CHASE BANK, N.A.	3rd First National Plaza Chicago, IL 60602	William Sholten 312-732-4600 william.sholten@jpmorgan.com	GMAC Mortgage, LLC	Custodial
1240	727114621	JPMORGAN CHASE BANK, N.A.	3rd First National Plaza Chicago, IL 60602	William Sholten 312-732-4600 william.sholten@jpmorgan.com	GMAC Mortgage, LLC	Custodial
1241	727114639	JPMORGAN CHASE BANK, N.A.	3rd First National Plaza Chicago, IL 60602	William Sholten 312-732-4600 william.sholten@jpmorgan.com	GMAC Mortgage, LLC	Custodial
1242	727114662	JPMORGAN CHASE BANK, N.A.	3rd First National Plaza Chicago, IL 60602	William Sholten 312-732-4600 william.sholten@jpmorgan.com	GMAC Mortgage, LLC	Custodial
1243	727114670	JPMORGAN CHASE BANK, N.A.	3rd First National Plaza Chicago, IL 60602	William Sholten 312-732-4600 william.sholten@jpmorgan.com	GMAC Mortgage, LLC	Custodial
1244	727114738	JPMORGAN CHASE BANK, N.A.	3rd First National Plaza Chicago, IL 60602	William Sholten 312-732-4600 william.sholten@jpmorgan.com	GMAC Mortgage, LLC	Custodial
1245	727114746	JPMORGAN CHASE BANK, N.A.	3rd First National Plaza Chicago, IL 60602	William Sholten 312-732-4600 william.sholten@jpmorgan.com	GMAC Mortgage, LLC	Custodial
1246	727114753	JPMORGAN CHASE BANK, N.A.	3rd First National Plaza Chicago, IL 60602	William Sholten 312-732-4600 william.sholten@jpmorgan.com	GMAC Mortgage, LLC	Custodial
1247	727114779	JPMORGAN CHASE BANK, N.A.	3rd First National Plaza Chicago, IL 60602	William Sholten 312-732-4600 william.sholten@jpmorgan.com	GMAC Mortgage, LLC	Custodial

Privileged and Confidential

Exhibit B - Bank Accounts

Ref #	Account Number	Bank	Address	Contact	Corporate/Company Code	Account Type
1248	727114787	JPMORGAN CHASE BANK, N.A.	3rd First National Plaza Chicago, IL 60602	William Sholten 312-732-4600 william.sholten@jpmorgan.com	GMAC Mortgage, LLC	Custodial
1249	727114795	JPMORGAN CHASE BANK, N.A.	3rd First National Plaza Chicago, IL 60602	William Sholten 312-732-4600 william.sholten@jpmorgan.com	GMAC Mortgage, LLC	Custodial
1250	727114803	JPMORGAN CHASE BANK, N.A.	3rd First National Plaza Chicago, IL 60602	William Sholten 312-732-4600 william.sholten@jpmorgan.com	GMAC Mortgage, LLC	Custodial
1251	727114878	JPMORGAN CHASE BANK, N.A.	3rd First National Plaza Chicago, IL 60602	William Sholten 312-732-4600 william.sholten@jpmorgan.com	GMAC Mortgage, LLC	Custodial
1252	727114902	JPMORGAN CHASE BANK, N.A.	3rd First National Plaza Chicago, IL 60602	William Sholten 312-732-4600 william.sholten@jpmorgan.com	GMAC Mortgage, LLC	Custodial
1253	727114928	JPMORGAN CHASE BANK, N.A.	3rd First National Plaza Chicago, IL 60602	William Sholten 312-732-4600 william.sholten@jpmorgan.com	GMAC Mortgage, LLC	Custodial
1254	727114951	JPMORGAN CHASE BANK, N.A.	3rd First National Plaza Chicago, IL 60602	William Sholten 312-732-4600 william.sholten@jpmorgan.com	GMAC Mortgage, LLC	Custodial
1255	727114969	JPMORGAN CHASE BANK, N.A.	3rd First National Plaza Chicago, IL 60602	William Sholten 312-732-4600 william.sholten@jpmorgan.com	GMAC Mortgage, LLC	Custodial
1256	727114977	JPMORGAN CHASE BANK, N.A.	3rd First National Plaza Chicago, IL 60602	William Sholten 312-732-4600 william.sholten@jpmorgan.com	GMAC Mortgage, LLC	Custodial
1257	727114985	JPMORGAN CHASE BANK, N.A.	3rd First National Plaza Chicago, IL 60602	William Sholten 312-732-4600 william.sholten@jpmorgan.com	GMAC Mortgage, LLC	Custodial
1258	727114993	JPMORGAN CHASE BANK, N.A.	3rd First National Plaza Chicago, IL 60602	William Sholten 312-732-4600 william.sholten@jpmorgan.com	GMAC Mortgage, LLC	Custodial
1259	727115008	JPMORGAN CHASE BANK, N.A.	3rd First National Plaza Chicago, IL 60602	William Sholten 312-732-4600 william.sholten@jpmorgan.com	GMAC Mortgage, LLC	Custodial
1260	727115057	JPMORGAN CHASE BANK, N.A.	3rd First National Plaza Chicago, IL 60602	William Sholten 312-732-4600 william.sholten@jpmorgan.com	GMAC Mortgage, LLC	Custodial
1261	727115065	JPMORGAN CHASE BANK, N.A.	3rd First National Plaza Chicago, IL 60602	William Sholten 312-732-4600 william.sholten@jpmorgan.com	GMAC Mortgage, LLC	Custodial
1262	727115099	JPMORGAN CHASE BANK, N.A.	3rd First National Plaza Chicago, IL 60602	William Sholten 312-732-4600 william.sholten@jpmorgan.com	GMAC Mortgage, LLC	Custodial
1263	727115107	JPMORGAN CHASE BANK, N.A.	3rd First National Plaza Chicago, IL 60602	William Sholten 312-732-4600 william.sholten@jpmorgan.com	GMAC Mortgage, LLC	Custodial
1264	727115115	JPMORGAN CHASE BANK, N.A.	3rd First National Plaza Chicago, IL 60602	William Sholten 312-732-4600 william.sholten@jpmorgan.com	GMAC Mortgage, LLC	Custodial
1265	727115123	JPMORGAN CHASE BANK, N.A.	3rd First National Plaza Chicago, IL 60602	William Sholten 312-732-4600 william.sholten@jpmorgan.com	GMAC Mortgage, LLC	Custodial
1266	728408567	JPMORGAN CHASE BANK, N.A.	3rd First National Plaza Chicago, IL 60602	William Sholten 312-732-4600 william.sholten@jpmorgan.com	GMAC Mortgage, LLC	Operating - General
1267	728454823	JPMORGAN CHASE BANK, N.A.	3rd First National Plaza Chicago, IL 60602	William Sholten 312-732-4600 william.sholten@jpmorgan.com	GMAC Mortgage, LLC	Operating - General
1268	741400436	JPMORGAN CHASE BANK, N.A.	3rd First National Plaza Chicago, IL 60602	William Sholten 312-732-4600 william.sholten@jpmorgan.com	GMAC Mortgage, LLC	Custodial
1269	741400444	JPMORGAN CHASE BANK, N.A.	3rd First National Plaza Chicago, IL 60602	William Sholten 312-732-4600 william.sholten@jpmorgan.com	GMAC Mortgage, LLC	Custodial
1270	741400451	JPMORGAN CHASE BANK, N.A.	3rd First National Plaza Chicago, IL 60602	William Sholten 312-732-4600 william.sholten@jpmorgan.com	GMAC Mortgage, LLC	Custodial
1271	741400469	JPMORGAN CHASE BANK, N.A.	3rd First National Plaza Chicago, IL 60602	William Sholten 312-732-4600 william.sholten@jpmorgan.com	GMAC Mortgage, LLC	Custodial
1272	741400477	JPMORGAN CHASE BANK, N.A.	3rd First National Plaza Chicago, IL 60602	William Sholten 312-732-4600 william.sholten@jpmorgan.com	GMAC Mortgage, LLC	Custodial
1273	741400485	JPMORGAN CHASE BANK, N.A.	3rd First National Plaza Chicago, IL 60602	William Sholten 312-732-4600 william.sholten@jpmorgan.com	GMAC Mortgage, LLC	Custodial
1274	741400493	JPMORGAN CHASE BANK, N.A.	3rd First National Plaza Chicago, IL 60602	William Sholten 312-732-4600 william.sholten@jpmorgan.com	GMAC Mortgage, LLC	Custodial
1275	741400501	JPMORGAN CHASE BANK, N.A.	3rd First National Plaza Chicago, IL 60602	William Sholten 312-732-4600 william.sholten@jpmorgan.com	GMAC Mortgage, LLC	Custodial
1276	741400519	JPMORGAN CHASE BANK, N.A.	3rd First National Plaza Chicago, IL 60602	William Sholten 312-732-4600 william.sholten@jpmorgan.com	GMAC Mortgage, LLC	Custodial
1277	741400527	JPMORGAN CHASE BANK, N.A.	3rd First National Plaza Chicago, IL 60602	William Sholten 312-732-4600 william.sholten@jpmorgan.com	GMAC Mortgage, LLC	Custodial
1278	741400535	JPMORGAN CHASE BANK, N.A.	3rd First National Plaza Chicago, IL 60602	William Sholten 312-732-4600 william.sholten@jpmorgan.com	GMAC Mortgage, LLC	Custodial
1279	741400675	JPMORGAN CHASE BANK, N.A.	3rd First National Plaza Chicago, IL 60602	William Sholten 312-732-4600 william.sholten@jpmorgan.com	GMAC Mortgage, LLC	Custodial
1280	741400758	JPMORGAN CHASE BANK, N.A.	3rd First National Plaza Chicago, IL 60602	William Sholten 312-732-4600 william.sholten@jpmorgan.com	GMAC Mortgage, LLC	Custodial
1281	741400774	JPMORGAN CHASE BANK, N.A.	3rd First National Plaza Chicago, IL 60602	William Sholten 312-732-4600 william.sholten@jpmorgan.com	GMAC Mortgage, LLC	Custodial
1282	741400782	JPMORGAN CHASE BANK, N.A.	3rd First National Plaza Chicago, IL 60602	William Sholten 312-732-4600 william.sholten@jpmorgan.com	GMAC Mortgage, LLC	Custodial
1283	741400790	JPMORGAN CHASE BANK, N.A.	3rd First National Plaza Chicago, IL 60602	William Sholten 312-732-4600 william.sholten@jpmorgan.com	GMAC Mortgage, LLC	Custodial
1284	741400816	JPMORGAN CHASE BANK, N.A.	3rd First National Plaza Chicago, IL 60602	William Sholten 312-732-4600 william.sholten@jpmorgan.com	GMAC Mortgage, LLC	Custodial
1285	741400832	JPMORGAN CHASE BANK, N.A.	3rd First National Plaza Chicago, IL 60602	William Sholten 312-732-4600 william.sholten@jpmorgan.com	GMAC Mortgage, LLC	Custodial
1286	741400840	JPMORGAN CHASE BANK, N.A.	3rd First National Plaza Chicago, IL 60602	William Sholten 312-732-4600 william.sholten@jpmorgan.com	GMAC Mortgage, LLC	Custodial
1287	741400865	JPMORGAN CHASE BANK, N.A.	3rd First National Plaza Chicago, IL 60602	William Sholten 312-732-4600 william.sholten@jpmorgan.com	GMAC Mortgage, LLC	Custodial
1288	741400873	JPMORGAN CHASE BANK, N.A.	3rd First National Plaza Chicago, IL 60602	William Sholten 312-732-4600 william.sholten@jpmorgan.com	GMAC Mortgage, LLC	Custodial
1289	741400881	JPMORGAN CHASE BANK, N.A.	3rd First National Plaza Chicago, IL 60602	William Sholten 312-732-4600 william.sholten@jpmorgan.com	GMAC Mortgage, LLC	Custodial
1290	741400899	JPMORGAN CHASE BANK, N.A.	3rd First National Plaza Chicago, IL 60602	William Sholten 312-732-4600 william.sholten@jpmorgan.com	GMAC Mortgage, LLC	Custodial

Privileged and Confidential

Exhibit B - Bank Accounts

Ref #	Account Number	Bank	Address	Contact	Corporate/Company Code	Account Type
1291	741400923	JPMORGAN CHASE BANK, N.A.	3rd First National Plaza Chicago, IL 60602	William Sholten 312-732-4600 william.sholten@jpmorgan.com	GMAC Mortgage, LLC	Custodial
1292	741400931	JPMORGAN CHASE BANK, N.A.	3rd First National Plaza Chicago, IL 60602	William Sholten 312-732-4600 william.sholten@jpmorgan.com	GMAC Mortgage, LLC	Custodial
1293	741400998	JPMORGAN CHASE BANK, N.A.	3rd First National Plaza Chicago, IL 60602	William Sholten 312-732-4600 william.sholten@jpmorgan.com	GMAC Mortgage, LLC	Custodial
1294	741401004	JPMORGAN CHASE BANK, N.A.	3rd First National Plaza Chicago, IL 60602	William Sholten 312-732-4600 william.sholten@jpmorgan.com	GMAC Mortgage, LLC	Custodial
1295	741401038	JPMORGAN CHASE BANK, N.A.	3rd First National Plaza Chicago, IL 60602	William Sholten 312-732-4600 william.sholten@jpmorgan.com	GMAC Mortgage, LLC	Custodial
1296	741401046	JPMORGAN CHASE BANK, N.A.	3rd First National Plaza Chicago, IL 60602	William Sholten 312-732-4600 william.sholten@jpmorgan.com	GMAC Mortgage, LLC	Custodial
1297	741401053	JPMORGAN CHASE BANK, N.A.	3rd First National Plaza Chicago, IL 60602	William Sholten 312-732-4600 william.sholten@jpmorgan.com	GMAC Mortgage, LLC	Custodial
1298	741401061	JPMORGAN CHASE BANK, N.A.	3rd First National Plaza Chicago, IL 60602	William Sholten 312-732-4600 william.sholten@jpmorgan.com	GMAC Mortgage, LLC	Custodial
1299	741401079	JPMORGAN CHASE BANK, N.A.	3rd First National Plaza Chicago, IL 60602	William Sholten 312-732-4600 william.sholten@jpmorgan.com	GMAC Mortgage, LLC	Custodial
1300	741401087	JPMORGAN CHASE BANK, N.A.	3rd First National Plaza Chicago, IL 60602	William Sholten 312-732-4600 william.sholten@jpmorgan.com	GMAC Mortgage, LLC	Custodial
1301	741401152	JPMORGAN CHASE BANK, N.A.	3rd First National Plaza Chicago, IL 60602	William Sholten 312-732-4600 william.sholten@jpmorgan.com	GMAC Mortgage, LLC	Custodial
1302	741401178	JPMORGAN CHASE BANK, N.A.	3rd First National Plaza Chicago, IL 60602	William Sholten 312-732-4600 william.sholten@jpmorgan.com	GMAC Mortgage, LLC	Custodial
1303	741401186	JPMORGAN CHASE BANK, N.A.	3rd First National Plaza Chicago, IL 60602	William Sholten 312-732-4600 william.sholten@jpmorgan.com	GMAC Mortgage, LLC	Custodial
1304	741401194	JPMORGAN CHASE BANK, N.A.	3rd First National Plaza Chicago, IL 60602	William Sholten 312-732-4600 william.sholten@jpmorgan.com	GMAC Mortgage, LLC	Custodial
1305	750528051	JPMORGAN CHASE BANK, N.A.	3rd First National Plaza Chicago, IL 60602	William Sholten 312-732-4600 william.sholten@jpmorgan.com	GMAC Mortgage, LLC	Custodial
1306	750528069	JPMORGAN CHASE BANK, N.A.	3rd First National Plaza Chicago, IL 60602	William Sholten 312-732-4600 william.sholten@jpmorgan.com	GMAC Mortgage, LLC	Custodial
1307	750528085	JPMORGAN CHASE BANK, N.A.	3rd First National Plaza Chicago, IL 60602	William Sholten 312-732-4600 william.sholten@jpmorgan.com	GMAC Mortgage, LLC	Custodial
1308	750528119	JPMORGAN CHASE BANK, N.A.	3rd First National Plaza Chicago, IL 60602	William Sholten 312-732-4600 william.sholten@jpmorgan.com	GMAC Mortgage, LLC	Custodial
1309	750528143	JPMORGAN CHASE BANK, N.A.	3rd First National Plaza Chicago, IL 60602	William Sholten 312-732-4600 william.sholten@jpmorgan.com	GMAC Mortgage, LLC	Custodial
1310	750528150	JPMORGAN CHASE BANK, N.A.	3rd First National Plaza Chicago, IL 60602	William Sholten 312-732-4600 william.sholten@jpmorgan.com	GMAC Mortgage, LLC	Custodial
1311	750528168	JPMORGAN CHASE BANK, N.A.	3rd First National Plaza Chicago, IL 60602	William Sholten 312-732-4600 william.sholten@jpmorgan.com	GMAC Mortgage, LLC	Custodial
1312	750528176	JPMORGAN CHASE BANK, N.A.	3rd First National Plaza Chicago, IL 60602	William Sholten 312-732-4600 william.sholten@jpmorgan.com	GMAC Mortgage, LLC	Custodial
1313	750528184	JPMORGAN CHASE BANK, N.A.	3rd First National Plaza Chicago, IL 60602	William Sholten 312-732-4600 william.sholten@jpmorgan.com	GMAC Mortgage, LLC	Custodial
1314	750528192	JPMORGAN CHASE BANK, N.A.	3rd First National Plaza Chicago, IL 60602	William Sholten 312-732-4600 william.sholten@jpmorgan.com	GMAC Mortgage, LLC	Custodial
1315	750528218	JPMORGAN CHASE BANK, N.A.	3rd First National Plaza Chicago, IL 60602	William Sholten 312-732-4600 william.sholten@jpmorgan.com	GMAC Mortgage, LLC	Custodial
1316	750528234	JPMORGAN CHASE BANK, N.A.	3rd First National Plaza Chicago, IL 60602	William Sholten 312-732-4600 william.sholten@jpmorgan.com	GMAC Mortgage, LLC	Custodial
1317	750528259	JPMORGAN CHASE BANK, N.A.	3rd First National Plaza Chicago, IL 60602	William Sholten 312-732-4600 william.sholten@jpmorgan.com	GMAC Mortgage, LLC	Custodial
1318	750529257	JPMORGAN CHASE BANK, N.A.	3rd First National Plaza Chicago, IL 60602	William Sholten 312-732-4600 william.sholten@jpmorgan.com	GMAC Mortgage, LLC	Custodial
1319	750529265	JPMORGAN CHASE BANK, N.A.	3rd First National Plaza Chicago, IL 60602	William Sholten 312-732-4600 william.sholten@jpmorgan.com	GMAC Mortgage, LLC	Custodial
1320	750529273	JPMORGAN CHASE BANK, N.A.	3rd First National Plaza Chicago, IL 60602	William Sholten 312-732-4600 william.sholten@jpmorgan.com	GMAC Mortgage, LLC	Custodial
1321	750529372	JPMORGAN CHASE BANK, N.A.	3rd First National Plaza Chicago, IL 60602	William Sholten 312-732-4600 william.sholten@jpmorgan.com	GMAC Mortgage, LLC	Custodial
1322	750529380	JPMORGAN CHASE BANK, N.A.	3rd First National Plaza Chicago, IL 60602	William Sholten 312-732-4600 william.sholten@jpmorgan.com	GMAC Mortgage, LLC	Custodial
1323	750529406	JPMORGAN CHASE BANK, N.A.	3rd First National Plaza Chicago, IL 60602	William Sholten 312-732-4600 william.sholten@jpmorgan.com	GMAC Mortgage, LLC	Custodial
1324	750529414	JPMORGAN CHASE BANK, N.A.	3rd First National Plaza Chicago, IL 60602	William Sholten 312-732-4600 william.sholten@jpmorgan.com	GMAC Mortgage, LLC	Custodial
1325	750529422	JPMORGAN CHASE BANK, N.A.	3rd First National Plaza Chicago, IL 60602	William Sholten 312-732-4600 william.sholten@jpmorgan.com	GMAC Mortgage, LLC	Custodial
1326	750529448	JPMORGAN CHASE BANK, N.A.	3rd First National Plaza Chicago, IL 60602	William Sholten 312-732-4600 william.sholten@jpmorgan.com	GMAC Mortgage, LLC	Custodial
1327	750529455	JPMORGAN CHASE BANK, N.A.	3rd First National Plaza Chicago, IL 60602	William Sholten 312-732-4600 william.sholten@jpmorgan.com	GMAC Mortgage, LLC	Custodial
1328	750529463	JPMORGAN CHASE BANK, N.A.	3rd First National Plaza Chicago, IL 60602	William Sholten 312-732-4600 william.sholten@jpmorgan.com	GMAC Mortgage, LLC	Custodial
1329	750529489	JPMORGAN CHASE BANK, N.A.	3rd First National Plaza Chicago, IL 60602	William Sholten 312-732-4600 william.sholten@jpmorgan.com	GMAC Mortgage, LLC	Custodial
1330	750529497	JPMORGAN CHASE BANK, N.A.	3rd First National Plaza Chicago, IL 60602	William Sholten 312-732-4600 william.sholten@jpmorgan.com	GMAC Mortgage, LLC	Custodial
1331	750529505	JPMORGAN CHASE BANK, N.A.	3rd First National Plaza Chicago, IL 60602	William Sholten 312-732-4600 william.sholten@jpmorgan.com	GMAC Mortgage, LLC	Custodial
1332	750529513	JPMORGAN CHASE BANK, N.A.	3rd First National Plaza Chicago, IL 60602	William Sholten 312-732-4600 william.sholten@jpmorgan.com	GMAC Mortgage, LLC	Custodial
1333	750529547	JPMORGAN CHASE BANK, N.A.	3rd First National Plaza Chicago, IL 60602	William Sholten 312-732-4600 william.sholten@jpmorgan.com	GMAC Mortgage, LLC	Custodial

Privileged and Confidential

Exhibit B - Bank Accounts

Ref #	Account Number	Bank	Address	Contact	Corporate/Company Code	Account Type
1334	750529554	JPMORGAN CHASE BANK, N.A.	3rd First National Plaza Chicago, IL 60602	William Sholten 312-732-4600 william.sholten@jpmorgan.com	GMAC Mortgage, LLC	Custodial
1335	750529562	JPMORGAN CHASE BANK, N.A.	3rd First National Plaza Chicago, IL 60602	William Sholten 312-732-4600 william.sholten@jpmorgan.com	GMAC Mortgage, LLC	Custodial
1336	750529570	JPMORGAN CHASE BANK, N.A.	3rd First National Plaza Chicago, IL 60602	William Sholten 312-732-4600 william.sholten@jpmorgan.com	GMAC Mortgage, LLC	Custodial
1337	750529588	JPMORGAN CHASE BANK, N.A.	3rd First National Plaza Chicago, IL 60602	William Sholten 312-732-4600 william.sholten@jpmorgan.com	GMAC Mortgage, LLC	Custodial
1338	750529596	JPMORGAN CHASE BANK, N.A.	3rd First National Plaza Chicago, IL 60602	William Sholten 312-732-4600 william.sholten@jpmorgan.com	GMAC Mortgage, LLC	Custodial
1339	750529752	JPMORGAN CHASE BANK, N.A.	3rd First National Plaza Chicago, IL 60602	William Sholten 312-732-4600 william.sholten@jpmorgan.com	GMAC Mortgage, LLC	Custodial
1340	750529760	JPMORGAN CHASE BANK, N.A.	3rd First National Plaza Chicago, IL 60602	William Sholten 312-732-4600 william.sholten@jpmorgan.com	GMAC Mortgage, LLC	Custodial
1341	750529802	JPMORGAN CHASE BANK, N.A.	3rd First National Plaza Chicago, IL 60602	William Sholten 312-732-4600 william.sholten@jpmorgan.com	GMAC Mortgage, LLC	Custodial
1342	750529828	JPMORGAN CHASE BANK, N.A.	3rd First National Plaza Chicago, IL 60602	William Sholten 312-732-4600 william.sholten@jpmorgan.com	GMAC Mortgage, LLC	Custodial
1343	750529836	JPMORGAN CHASE BANK, N.A.	3rd First National Plaza Chicago, IL 60602	William Sholten 312-732-4600 william.sholten@jpmorgan.com	GMAC Mortgage, LLC	Custodial
1344	750529851	JPMORGAN CHASE BANK, N.A.	3rd First National Plaza Chicago, IL 60602	William Sholten 312-732-4600 william.sholten@jpmorgan.com	GMAC Mortgage, LLC	Custodial
1345	750529869	JPMORGAN CHASE BANK, N.A.	3rd First National Plaza Chicago, IL 60602	William Sholten 312-732-4600 william.sholten@jpmorgan.com	GMAC Mortgage, LLC	Custodial
1346	750529877	JPMORGAN CHASE BANK, N.A.	3rd First National Plaza Chicago, IL 60602	William Sholten 312-732-4600 william.sholten@jpmorgan.com	GMAC Mortgage, LLC	Custodial
1347	750529919	JPMORGAN CHASE BANK, N.A.	3rd First National Plaza Chicago, IL 60602	William Sholten 312-732-4600 william.sholten@jpmorgan.com	GMAC Mortgage, LLC	Custodial
1348	750529927	JPMORGAN CHASE BANK, N.A.	3rd First National Plaza Chicago, IL 60602	William Sholten 312-732-4600 william.sholten@jpmorgan.com	GMAC Mortgage, LLC	Custodial
1349	750529935	JPMORGAN CHASE BANK, N.A.	3rd First National Plaza Chicago, IL 60602	William Sholten 312-732-4600 william.sholten@jpmorgan.com	GMAC Mortgage, LLC	Custodial
1350	750529976	JPMORGAN CHASE BANK, N.A.	3rd First National Plaza Chicago, IL 60602	William Sholten 312-732-4600 william.sholten@jpmorgan.com	GMAC Mortgage, LLC	Custodial
1351	750529992	JPMORGAN CHASE BANK, N.A.	3rd First National Plaza Chicago, IL 60602	William Sholten 312-732-4600 william.sholten@jpmorgan.com	GMAC Mortgage, LLC	Custodial
1352	750530016	JPMORGAN CHASE BANK, N.A.	3rd First National Plaza Chicago, IL 60602	William Sholten 312-732-4600 william.sholten@jpmorgan.com	GMAC Mortgage, LLC	Custodial
1353	750530024	JPMORGAN CHASE BANK, N.A.	3rd First National Plaza Chicago, IL 60602	William Sholten 312-732-4600 william.sholten@jpmorgan.com	GMAC Mortgage, LLC	Custodial
1354	750530057	JPMORGAN CHASE BANK, N.A.	3rd First National Plaza Chicago, IL 60602	William Sholten 312-732-4600 william.sholten@jpmorgan.com	GMAC Mortgage, LLC	Custodial
1355	750530065	JPMORGAN CHASE BANK, N.A.	3rd First National Plaza Chicago, IL 60602	William Sholten 312-732-4600 william.sholten@jpmorgan.com	GMAC Mortgage, LLC	Custodial
1356	750530073	JPMORGAN CHASE BANK, N.A.	3rd First National Plaza Chicago, IL 60602	William Sholten 312-732-4600 william.sholten@jpmorgan.com	GMAC Mortgage, LLC	Custodial
1357	750530081	JPMORGAN CHASE BANK, N.A.	3rd First National Plaza Chicago, IL 60602	William Sholten 312-732-4600 william.sholten@jpmorgan.com	GMAC Mortgage, LLC	Custodial
1358	750530107	JPMORGAN CHASE BANK, N.A.	3rd First National Plaza Chicago, IL 60602	William Sholten 312-732-4600 william.sholten@jpmorgan.com	GMAC Mortgage, LLC	Custodial
1359	750530172	JPMORGAN CHASE BANK, N.A.	3rd First National Plaza Chicago, IL 60602	William Sholten 312-732-4600 william.sholten@jpmorgan.com	GMAC Mortgage, LLC	Custodial
1360	750530180	JPMORGAN CHASE BANK, N.A.	3rd First National Plaza Chicago, IL 60602	William Sholten 312-732-4600 william.sholten@jpmorgan.com	GMAC Mortgage, LLC	Custodial
1361	750530198	JPMORGAN CHASE BANK, N.A.	3rd First National Plaza Chicago, IL 60602	William Sholten 312-732-4600 william.sholten@jpmorgan.com	GMAC Mortgage, LLC	Custodial
1362	750535973	JPMORGAN CHASE BANK, N.A.	3rd First National Plaza Chicago, IL 60602	William Sholten 312-732-4600 william.sholten@jpmorgan.com	GMAC Mortgage, LLC	Custodial
1363	750536005	JPMORGAN CHASE BANK, N.A.	3rd First National Plaza Chicago, IL 60602	William Sholten 312-732-4600 william.sholten@jpmorgan.com	GMAC Mortgage, LLC	Custodial
1364	750536013	JPMORGAN CHASE BANK, N.A.	3rd First National Plaza Chicago, IL 60602	William Sholten 312-732-4600 william.sholten@jpmorgan.com	GMAC Mortgage, LLC	Custodial
1365	750536021	JPMORGAN CHASE BANK, N.A.	3rd First National Plaza Chicago, IL 60602	William Sholten 312-732-4600 william.sholten@jpmorgan.com	GMAC Mortgage, LLC	Custodial
1366	750536039	JPMORGAN CHASE BANK, N.A.	3rd First National Plaza Chicago, IL 60602	William Sholten 312-732-4600 william.sholten@jpmorgan.com	GMAC Mortgage, LLC	Custodial
1367	750536062	JPMORGAN CHASE BANK, N.A.	3rd First National Plaza Chicago, IL 60602	William Sholten 312-732-4600 william.sholten@jpmorgan.com	GMAC Mortgage, LLC	Custodial
1368	750536070	JPMORGAN CHASE BANK, N.A.	3rd First National Plaza Chicago, IL 60602	William Sholten 312-732-4600 william.sholten@jpmorgan.com	GMAC Mortgage, LLC	Custodial
1369	750536120	JPMORGAN CHASE BANK, N.A.	3rd First National Plaza Chicago, IL 60602	William Sholten 312-732-4600 william.sholten@jpmorgan.com	GMAC Mortgage, LLC	Custodial
1370	750536138	JPMORGAN CHASE BANK, N.A.	3rd First National Plaza Chicago, IL 60602	William Sholten 312-732-4600 william.sholten@jpmorgan.com	GMAC Mortgage, LLC	Custodial
1371	750536146	JPMORGAN CHASE BANK, N.A.	3rd First National Plaza Chicago, IL 60602	William Sholten 312-732-4600 william.sholten@jpmorgan.com	GMAC Mortgage, LLC	Custodial
1372	750536153	JPMORGAN CHASE BANK, N.A.	3rd First National Plaza Chicago, IL 60602	William Sholten 312-732-4600 william.sholten@jpmorgan.com	GMAC Mortgage, LLC	Custodial
1373	750536161	JPMORGAN CHASE BANK, N.A.	3rd First National Plaza Chicago, IL 60602	William Sholten 312-732-4600 william.sholten@jpmorgan.com	GMAC Mortgage, LLC	Custodial
1374	750536179	JPMORGAN CHASE BANK, N.A.	3rd First National Plaza Chicago, IL 60602	William Sholten 312-732-4600 william.sholten@jpmorgan.com	GMAC Mortgage, LLC	Custodial
1375	750536187	JPMORGAN CHASE BANK, N.A.	3rd First National Plaza Chicago, IL 60602	William Sholten 312-732-4600 william.sholten@jpmorgan.com	GMAC Mortgage, LLC	Custodial
1376	750536195	JPMORGAN CHASE BANK, N.A.	3rd First National Plaza Chicago, IL 60602	William Sholten 312-732-4600 william.sholten@jpmorgan.com	GMAC Mortgage, LLC	Custodial

Privileged and Confidential

Exhibit B - Bank Accounts

Ref #	Account Number	Bank	Address	Contact	Corporate/Company Code	Account Type
1377	750536229	JPMORGAN CHASE BANK, N.A.	3rd First National Plaza Chicago, IL 60602	William Sholten 312-732-4600 william.sholten@jpmorgan.com	GMAC Mortgage, LLC	Custodial
1378	750536237	JPMORGAN CHASE BANK, N.A.	3rd First National Plaza Chicago, IL 60602	William Sholten 312-732-4600 william.sholten@jpmorgan.com	GMAC Mortgage, LLC	Custodial
1379	750536385	JPMORGAN CHASE BANK, N.A.	3rd First National Plaza Chicago, IL 60602	William Sholten 312-732-4600 william.sholten@jpmorgan.com	GMAC Mortgage, LLC	Custodial
1380	750536393	JPMORGAN CHASE BANK, N.A.	3rd First National Plaza Chicago, IL 60602	William Sholten 312-732-4600 william.sholten@jpmorgan.com	GMAC Mortgage, LLC	Custodial
1381	750536401	JPMORGAN CHASE BANK, N.A.	3rd First National Plaza Chicago, IL 60602	William Sholten 312-732-4600 william.sholten@jpmorgan.com	GMAC Mortgage, LLC	Custodial
1382	750536419	JPMORGAN CHASE BANK, N.A.	3rd First National Plaza Chicago, IL 60602	William Sholten 312-732-4600 william.sholten@jpmorgan.com	GMAC Mortgage, LLC	Custodial
1383	750536427	JPMORGAN CHASE BANK, N.A.	3rd First National Plaza Chicago, IL 60602	William Sholten 312-732-4600 william.sholten@jpmorgan.com	GMAC Mortgage, LLC	Custodial
1384	750536542	JPMORGAN CHASE BANK, N.A.	3rd First National Plaza Chicago, IL 60602	William Sholten 312-732-4600 william.sholten@jpmorgan.com	GMAC Mortgage, LLC	Custodial
1385	750536559	JPMORGAN CHASE BANK, N.A.	3rd First National Plaza Chicago, IL 60602	William Sholten 312-732-4600 william.sholten@jpmorgan.com	GMAC Mortgage, LLC	Custodial
1386	750536567	JPMORGAN CHASE BANK, N.A.	3rd First National Plaza Chicago, IL 60602	William Sholten 312-732-4600 william.sholten@jpmorgan.com	GMAC Mortgage, LLC	Custodial
1387	750536575	JPMORGAN CHASE BANK, N.A.	3rd First National Plaza Chicago, IL 60602	William Sholten 312-732-4600 william.sholten@jpmorgan.com	GMAC Mortgage, LLC	Custodial
1388	750536609	JPMORGAN CHASE BANK, N.A.	3rd First National Plaza Chicago, IL 60602	William Sholten 312-732-4600 william.sholten@jpmorgan.com	GMAC Mortgage, LLC	Custodial
1389	750536617	JPMORGAN CHASE BANK, N.A.	3rd First National Plaza Chicago, IL 60602	William Sholten 312-732-4600 william.sholten@jpmorgan.com	GMAC Mortgage, LLC	Custodial
1390	758664510	JPMORGAN CHASE BANK, N.A.	3rd First National Plaza Chicago, IL 60602	William Sholten 312-732-4600 william.sholten@jpmorgan.com	GMAC Mortgage, LLC	Custodial
1391	758664601	JPMORGAN CHASE BANK, N.A.	3rd First National Plaza Chicago, IL 60602	William Sholten 312-732-4600 william.sholten@jpmorgan.com	GMAC Mortgage, LLC	Custodial
1392	758664650	JPMORGAN CHASE BANK, N.A.	3rd First National Plaza Chicago, IL 60602	William Sholten 312-732-4600 william.sholten@jpmorgan.com	GMAC Mortgage, LLC	Custodial
1393	758664700	JPMORGAN CHASE BANK, N.A.	3rd First National Plaza Chicago, IL 60602	William Sholten 312-732-4600 william.sholten@jpmorgan.com	GMAC Mortgage, LLC	Custodial
1394	758664718	JPMORGAN CHASE BANK, N.A.	3rd First National Plaza Chicago, IL 60602	William Sholten 312-732-4600 william.sholten@jpmorgan.com	GMAC Mortgage, LLC	Custodial
1395	758664726	JPMORGAN CHASE BANK, N.A.	3rd First National Plaza Chicago, IL 60602	William Sholten 312-732-4600 william.sholten@jpmorgan.com	GMAC Mortgage, LLC	Custodial
1396	758664841	JPMORGAN CHASE BANK, N.A.	3rd First National Plaza Chicago, IL 60602	William Sholten 312-732-4600 william.sholten@jpmorgan.com	GMAC Mortgage, LLC	Custodial
1397	758664858	JPMORGAN CHASE BANK, N.A.	3rd First National Plaza Chicago, IL 60602	William Sholten 312-732-4600 william.sholten@jpmorgan.com	GMAC Mortgage, LLC	Custodial
1398	758664866	JPMORGAN CHASE BANK, N.A.	3rd First National Plaza Chicago, IL 60602	William Sholten 312-732-4600 william.sholten@jpmorgan.com	GMAC Mortgage, LLC	Custodial
1399	758664882	JPMORGAN CHASE BANK, N.A.	3rd First National Plaza Chicago, IL 60602	William Sholten 312-732-4600 william.sholten@jpmorgan.com	GMAC Mortgage, LLC	Custodial
1400	758664890	JPMORGAN CHASE BANK, N.A.	3rd First National Plaza Chicago, IL 60602	William Sholten 312-732-4600 william.sholten@jpmorgan.com	GMAC Mortgage, LLC	Custodial
1401	758664916	JPMORGAN CHASE BANK, N.A.	3rd First National Plaza Chicago, IL 60602	William Sholten 312-732-4600 william.sholten@jpmorgan.com	GMAC Mortgage, LLC	Custodial
1402	758664924	JPMORGAN CHASE BANK, N.A.	3rd First National Plaza Chicago, IL 60602	William Sholten 312-732-4600 william.sholten@jpmorgan.com	GMAC Mortgage, LLC	Custodial
1403	758664932	JPMORGAN CHASE BANK, N.A.	3rd First National Plaza Chicago, IL 60602	William Sholten 312-732-4600 william.sholten@jpmorgan.com	GMAC Mortgage, LLC	Custodial
1404	758664940	JPMORGAN CHASE BANK, N.A.	3rd First National Plaza Chicago, IL 60602	William Sholten 312-732-4600 william.sholten@jpmorgan.com	GMAC Mortgage, LLC	Custodial
1405	758664957	JPMORGAN CHASE BANK, N.A.	3rd First National Plaza Chicago, IL 60602	William Sholten 312-732-4600 william.sholten@jpmorgan.com	GMAC Mortgage, LLC	Custodial
1406	758664981	JPMORGAN CHASE BANK, N.A.	3rd First National Plaza Chicago, IL 60602	William Sholten 312-732-4600 william.sholten@jpmorgan.com	GMAC Mortgage, LLC	Custodial
1407	758664999	JPMORGAN CHASE BANK, N.A.	3rd First National Plaza Chicago, IL 60602	William Sholten 312-732-4600 william.sholten@jpmorgan.com	GMAC Mortgage, LLC	Custodial
1408	758665004	JPMORGAN CHASE BANK, N.A.	3rd First National Plaza Chicago, IL 60602	William Sholten 312-732-4600 william.sholten@jpmorgan.com	GMAC Mortgage, LLC	Custodial
1409	758665012	JPMORGAN CHASE BANK, N.A.	3rd First National Plaza Chicago, IL 60602	William Sholten 312-732-4600 william.sholten@jpmorgan.com	GMAC Mortgage, LLC	Custodial
1410	758665020	JPMORGAN CHASE BANK, N.A.	3rd First National Plaza Chicago, IL 60602	William Sholten 312-732-4600 william.sholten@jpmorgan.com	GMAC Mortgage, LLC	Custodial
1411	758665038	JPMORGAN CHASE BANK, N.A.	3rd First National Plaza Chicago, IL 60602	William Sholten 312-732-4600 william.sholten@jpmorgan.com	GMAC Mortgage, LLC	Custodial
1412	758665061	JPMORGAN CHASE BANK, N.A.	3rd First National Plaza Chicago, IL 60602	William Sholten 312-732-4600 william.sholten@jpmorgan.com	GMAC Mortgage, LLC	Custodial
1413	758665079	JPMORGAN CHASE BANK, N.A.	3rd First National Plaza Chicago, IL 60602	William Sholten 312-732-4600 william.sholten@jpmorgan.com	GMAC Mortgage, LLC	Custodial
1414	758665087	JPMORGAN CHASE BANK, N.A.	3rd First National Plaza Chicago, IL 60602	William Sholten 312-732-4600 william.sholten@jpmorgan.com	GMAC Mortgage, LLC	Custodial
1415	758665095	JPMORGAN CHASE BANK, N.A.	3rd First National Plaza Chicago, IL 60602	William Sholten 312-732-4600 william.sholten@jpmorgan.com	GMAC Mortgage, LLC	Custodial
1416	758665103	JPMORGAN CHASE BANK, N.A.	3rd First National Plaza Chicago, IL 60602	William Sholten 312-732-4600 william.sholten@jpmorgan.com	GMAC Mortgage, LLC	Custodial
1417	758665111	JPMORGAN CHASE BANK, N.A.	3rd First National Plaza Chicago, IL 60602	William Sholten 312-732-4600 william.sholten@jpmorgan.com	GMAC Mortgage, LLC	Custodial
1418	758665160	JPMORGAN CHASE BANK, N.A.	3rd First National Plaza Chicago, IL 60602	William Sholten 312-732-4600 william.sholten@jpmorgan.com	GMAC Mortgage, LLC	Custodial
1419	758665178	JPMORGAN CHASE BANK, N.A.	3rd First National Plaza Chicago, IL 60602	William Sholten 312-732-4600 william.sholten@jpmorgan.com	GMAC Mortgage, LLC	Custodial

Privileged and Confidential

Exhibit B - Bank Accounts

Ref #	Account Number	Bank	Address	Contact	Corporate/Company Code	Account Type
1420	758665186	JPMORGAN CHASE BANK, N.A.	3rd First National Plaza Chicago, IL 60602	William Sholten 312-732-4600 william.sholten@jpmorgan.com	GMAC Mortgage, LLC	Custodial
1421	758665194	JPMORGAN CHASE BANK, N.A.	3rd First National Plaza Chicago, IL 60602	William Sholten 312-732-4600 william.sholten@jpmorgan.com	GMAC Mortgage, LLC	Custodial
1422	758665202	JPMORGAN CHASE BANK, N.A.	3rd First National Plaza Chicago, IL 60602	William Sholten 312-732-4600 william.sholten@jpmorgan.com	GMAC Mortgage, LLC	Custodial
1423	758665210	JPMORGAN CHASE BANK, N.A.	3rd First National Plaza Chicago, IL 60602	William Sholten 312-732-4600 william.sholten@jpmorgan.com	GMAC Mortgage, LLC	Custodial
1424	758665228	JPMORGAN CHASE BANK, N.A.	3rd First National Plaza Chicago, IL 60602	William Sholten 312-732-4600 william.sholten@jpmorgan.com	GMAC Mortgage, LLC	Custodial
1425	758665236	JPMORGAN CHASE BANK, N.A.	3rd First National Plaza Chicago, IL 60602	William Sholten 312-732-4600 william.sholten@jpmorgan.com	GMAC Mortgage, LLC	Custodial
1426	758665244	JPMORGAN CHASE BANK, N.A.	3rd First National Plaza Chicago, IL 60602	William Sholten 312-732-4600 william.sholten@jpmorgan.com	GMAC Mortgage, LLC	Custodial
1427	758665251	JPMORGAN CHASE BANK, N.A.	3rd First National Plaza Chicago, IL 60602	William Sholten 312-732-4600 william.sholten@jpmorgan.com	GMAC Mortgage, LLC	Custodial
1428	758665269	JPMORGAN CHASE BANK, N.A.	3rd First National Plaza Chicago, IL 60602	William Sholten 312-732-4600 william.sholten@jpmorgan.com	GMAC Mortgage, LLC	Custodial
1429	758665277	JPMORGAN CHASE BANK, N.A.	3rd First National Plaza Chicago, IL 60602	William Sholten 312-732-4600 william.sholten@jpmorgan.com	GMAC Mortgage, LLC	Custodial
1430	758665285	JPMORGAN CHASE BANK, N.A.	3rd First National Plaza Chicago, IL 60602	William Sholten 312-732-4600 william.sholten@jpmorgan.com	GMAC Mortgage, LLC	Custodial
1431	758665293	JPMORGAN CHASE BANK, N.A.	3rd First National Plaza Chicago, IL 60602	William Sholten 312-732-4600 william.sholten@jpmorgan.com	GMAC Mortgage, LLC	Custodial
1432	758665301	JPMORGAN CHASE BANK, N.A.	3rd First National Plaza Chicago, IL 60602	William Sholten 312-732-4600 william.sholten@jpmorgan.com	GMAC Mortgage, LLC	Custodial
1433	758665319	JPMORGAN CHASE BANK, N.A.	3rd First National Plaza Chicago, IL 60602	William Sholten 312-732-4600 william.sholten@jpmorgan.com	GMAC Mortgage, LLC	Custodial
1434	758665327	JPMORGAN CHASE BANK, N.A.	3rd First National Plaza Chicago, IL 60602	William Sholten 312-732-4600 william.sholten@jpmorgan.com	GMAC Mortgage, LLC	Custodial
1435	758665335	JPMORGAN CHASE BANK, N.A.	3rd First National Plaza Chicago, IL 60602	William Sholten 312-732-4600 william.sholten@jpmorgan.com	GMAC Mortgage, LLC	Custodial
1436	758665343	JPMORGAN CHASE BANK, N.A.	3rd First National Plaza Chicago, IL 60602	William Sholten 312-732-4600 william.sholten@jpmorgan.com	GMAC Mortgage, LLC	Custodial
1437	758665350	JPMORGAN CHASE BANK, N.A.	3rd First National Plaza Chicago, IL 60602	William Sholten 312-732-4600 william.sholten@jpmorgan.com	GMAC Mortgage, LLC	Custodial
1438	758665368	JPMORGAN CHASE BANK, N.A.	3rd First National Plaza Chicago, IL 60602	William Sholten 312-732-4600 william.sholten@jpmorgan.com	GMAC Mortgage, LLC	Custodial
1439	758665376	JPMORGAN CHASE BANK, N.A.	3rd First National Plaza Chicago, IL 60602	William Sholten 312-732-4600 william.sholten@jpmorgan.com	GMAC Mortgage, LLC	Custodial
1440	758665400	JPMORGAN CHASE BANK, N.A.	3rd First National Plaza Chicago, IL 60602	William Sholten 312-732-4600 william.sholten@jpmorgan.com	GMAC Mortgage, LLC	Custodial
1441	758665418	JPMORGAN CHASE BANK, N.A.	3rd First National Plaza Chicago, IL 60602	William Sholten 312-732-4600 william.sholten@jpmorgan.com	GMAC Mortgage, LLC	Custodial
1442	758665426	JPMORGAN CHASE BANK, N.A.	3rd First National Plaza Chicago, IL 60602	William Sholten 312-732-4600 william.sholten@jpmorgan.com	GMAC Mortgage, LLC	Custodial
1443	758665434	JPMORGAN CHASE BANK, N.A.	3rd First National Plaza Chicago, IL 60602	William Sholten 312-732-4600 william.sholten@jpmorgan.com	GMAC Mortgage, LLC	Custodial
1444	758665442	JPMORGAN CHASE BANK, N.A.	3rd First National Plaza Chicago, IL 60602	William Sholten 312-732-4600 william.sholten@jpmorgan.com	GMAC Mortgage, LLC	Custodial
1445	758665459	JPMORGAN CHASE BANK, N.A.	3rd First National Plaza Chicago, IL 60602	William Sholten 312-732-4600 william.sholten@jpmorgan.com	GMAC Mortgage, LLC	Custodial
1446	758665467	JPMORGAN CHASE BANK, N.A.	3rd First National Plaza Chicago, IL 60602	William Sholten 312-732-4600 william.sholten@jpmorgan.com	GMAC Mortgage, LLC	Custodial
1447	758665475	JPMORGAN CHASE BANK, N.A.	3rd First National Plaza Chicago, IL 60602	William Sholten 312-732-4600 william.sholten@jpmorgan.com	GMAC Mortgage, LLC	Custodial
1448	758665483	JPMORGAN CHASE BANK, N.A.	3rd First National Plaza Chicago, IL 60602	William Sholten 312-732-4600 william.sholten@jpmorgan.com	GMAC Mortgage, LLC	Custodial
1449	758665491	JPMORGAN CHASE BANK, N.A.	3rd First National Plaza Chicago, IL 60602	William Sholten 312-732-4600 william.sholten@jpmorgan.com	GMAC Mortgage, LLC	Custodial
1450	758665509	JPMORGAN CHASE BANK, N.A.	3rd First National Plaza Chicago, IL 60602	William Sholten 312-732-4600 william.sholten@jpmorgan.com	GMAC Mortgage, LLC	Custodial
1451	758665517	JPMORGAN CHASE BANK, N.A.	3rd First National Plaza Chicago, IL 60602	William Sholten 312-732-4600 william.sholten@jpmorgan.com	GMAC Mortgage, LLC	Custodial
1452	758665608	JPMORGAN CHASE BANK, N.A.	3rd First National Plaza Chicago, IL 60602	William Sholten 312-732-4600 william.sholten@jpmorgan.com	GMAC Mortgage, LLC	Custodial
1453	758665616	JPMORGAN CHASE BANK, N.A.	3rd First National Plaza Chicago, IL 60602	William Sholten 312-732-4600 william.sholten@jpmorgan.com	GMAC Mortgage, LLC	Custodial
1454	758665624	JPMORGAN CHASE BANK, N.A.	3rd First National Plaza Chicago, IL 60602	William Sholten 312-732-4600 william.sholten@jpmorgan.com	GMAC Mortgage, LLC	Custodial
1455	758665632	JPMORGAN CHASE BANK, N.A.	3rd First National Plaza Chicago, IL 60602	William Sholten 312-732-4600 william.sholten@jpmorgan.com	GMAC Mortgage, LLC	Custodial
1456	758665665	JPMORGAN CHASE BANK, N.A.	3rd First National Plaza Chicago, IL 60602	William Sholten 312-732-4600 william.sholten@jpmorgan.com	GMAC Mortgage, LLC	Custodial
1457	758665673	JPMORGAN CHASE BANK, N.A.	3rd First National Plaza Chicago, IL 60602	William Sholten 312-732-4600 william.sholten@jpmorgan.com	GMAC Mortgage, LLC	Custodial
1458	758665707	JPMORGAN CHASE BANK, N.A.	3rd First National Plaza Chicago, IL 60602	William Sholten 312-732-4600 william.sholten@jpmorgan.com	GMAC Mortgage, LLC	Custodial
1459	758665715	JPMORGAN CHASE BANK, N.A.	3rd First National Plaza Chicago, IL 60602	William Sholten 312-732-4600 william.sholten@jpmorgan.com	GMAC Mortgage, LLC	Custodial
1460	758665749	JPMORGAN CHASE BANK, N.A.	3rd First National Plaza Chicago, IL 60602	William Sholten 312-732-4600 william.sholten@jpmorgan.com	GMAC Mortgage, LLC	Custodial
1461	758665756	JPMORGAN CHASE BANK, N.A.	3rd First National Plaza Chicago, IL 60602	William Sholten 312-732-4600 william.sholten@jpmorgan.com	GMAC Mortgage, LLC	Custodial
1462	765878228	JPMORGAN CHASE BANK, N.A.	3rd First National Plaza Chicago, IL 60602	William Sholten 312-732-4600 william.sholten@jpmorgan.com	GMAC Mortgage, LLC	Custodial

Privileged and Confidential

Exhibit B - Bank Accounts

Ref #	Account Number	Bank	Address	Contact	Corporate/Company Code	Account Type
1463	765878400	JPMORGAN CHASE BANK, N.A.	3rd First National Plaza Chicago, IL 60602	William Sholten 312-732-4600 william.sholten@jpmorgan.com	GMAC Mortgage, LLC	Custodial
1464	765878418	JPMORGAN CHASE BANK, N.A.	3rd First National Plaza Chicago, IL 60602	William Sholten 312-732-4600 william.sholten@jpmorgan.com	GMAC Mortgage, LLC	Custodial
1465	765878434	JPMORGAN CHASE BANK, N.A.	3rd First National Plaza Chicago, IL 60602	William Sholten 312-732-4600 william.sholten@jpmorgan.com	GMAC Mortgage, LLC	Custodial
1466	765878467	JPMORGAN CHASE BANK, N.A.	3rd First National Plaza Chicago, IL 60602	William Sholten 312-732-4600 william.sholten@jpmorgan.com	GMAC Mortgage, LLC	Custodial
1467	765878483	JPMORGAN CHASE BANK, N.A.	3rd First National Plaza Chicago, IL 60602	William Sholten 312-732-4600 william.sholten@jpmorgan.com	GMAC Mortgage, LLC	Custodial
1468	765878533	JPMORGAN CHASE BANK, N.A.	3rd First National Plaza Chicago, IL 60602	William Sholten 312-732-4600 william.sholten@jpmorgan.com	GMAC Mortgage, LLC	Custodial
1469	765878541	JPMORGAN CHASE BANK, N.A.	3rd First National Plaza Chicago, IL 60602	William Sholten 312-732-4600 william.sholten@jpmorgan.com	GMAC Mortgage, LLC	Custodial
1470	765878582	JPMORGAN CHASE BANK, N.A.	3rd First National Plaza Chicago, IL 60602	William Sholten 312-732-4600 william.sholten@jpmorgan.com	GMAC Mortgage, LLC	Custodial
1471	765878608	JPMORGAN CHASE BANK, N.A.	3rd First National Plaza Chicago, IL 60602	William Sholten 312-732-4600 william.sholten@jpmorgan.com	GMAC Mortgage, LLC	Custodial
1472	765878616	JPMORGAN CHASE BANK, N.A.	3rd First National Plaza Chicago, IL 60602	William Sholten 312-732-4600 william.sholten@jpmorgan.com	GMAC Mortgage, LLC	Custodial
1473	765878632	JPMORGAN CHASE BANK, N.A.	3rd First National Plaza Chicago, IL 60602	William Sholten 312-732-4600 william.sholten@jpmorgan.com	GMAC Mortgage, LLC	Custodial
1474	765878640	JPMORGAN CHASE BANK, N.A.	3rd First National Plaza Chicago, IL 60602	William Sholten 312-732-4600 william.sholten@jpmorgan.com	GMAC Mortgage, LLC	Custodial
1475	765878707	JPMORGAN CHASE BANK, N.A.	3rd First National Plaza Chicago, IL 60602	William Sholten 312-732-4600 william.sholten@jpmorgan.com	GMAC Mortgage, LLC	Custodial
1476	765878715	JPMORGAN CHASE BANK, N.A.	3rd First National Plaza Chicago, IL 60602	William Sholten 312-732-4600 william.sholten@jpmorgan.com	GMAC Mortgage, LLC	Custodial
1477	765878731	JPMORGAN CHASE BANK, N.A.	3rd First National Plaza Chicago, IL 60602	William Sholten 312-732-4600 william.sholten@jpmorgan.com	GMAC Mortgage, LLC	Custodial
1478	765878749	JPMORGAN CHASE BANK, N.A.	3rd First National Plaza Chicago, IL 60602	William Sholten 312-732-4600 william.sholten@jpmorgan.com	GMAC Mortgage, LLC	Custodial
1479	765878756	JPMORGAN CHASE BANK, N.A.	3rd First National Plaza Chicago, IL 60602	William Sholten 312-732-4600 william.sholten@jpmorgan.com	GMAC Mortgage, LLC	Custodial
1480	765878764	JPMORGAN CHASE BANK, N.A.	3rd First National Plaza Chicago, IL 60602	William Sholten 312-732-4600 william.sholten@jpmorgan.com	GMAC Mortgage, LLC	Custodial
1481	765878772	JPMORGAN CHASE BANK, N.A.	3rd First National Plaza Chicago, IL 60602	William Sholten 312-732-4600 william.sholten@jpmorgan.com	GMAC Mortgage, LLC	Custodial
1482	765878848	JPMORGAN CHASE BANK, N.A.	3rd First National Plaza Chicago, IL 60602	William Sholten 312-732-4600 william.sholten@jpmorgan.com	GMAC Mortgage, LLC	Custodial
1483	765878855	JPMORGAN CHASE BANK, N.A.	3rd First National Plaza Chicago, IL 60602	William Sholten 312-732-4600 william.sholten@jpmorgan.com	GMAC Mortgage, LLC	Custodial
1484	765878871	JPMORGAN CHASE BANK, N.A.	3rd First National Plaza Chicago, IL 60602	William Sholten 312-732-4600 william.sholten@jpmorgan.com	GMAC Mortgage, LLC	Custodial
1485	765878889	JPMORGAN CHASE BANK, N.A.	3rd First National Plaza Chicago, IL 60602	William Sholten 312-732-4600 william.sholten@jpmorgan.com	GMAC Mortgage, LLC	Custodial
1486	765878905	JPMORGAN CHASE BANK, N.A.	3rd First National Plaza Chicago, IL 60602	William Sholten 312-732-4600 william.sholten@jpmorgan.com	GMAC Mortgage, LLC	Custodial
1487	765878913	JPMORGAN CHASE BANK, N.A.	3rd First National Plaza Chicago, IL 60602	William Sholten 312-732-4600 william.sholten@jpmorgan.com	GMAC Mortgage, LLC	Custodial
1488	765878939	JPMORGAN CHASE BANK, N.A.	3rd First National Plaza Chicago, IL 60602	William Sholten 312-732-4600 william.sholten@jpmorgan.com	GMAC Mortgage, LLC	Custodial
1489	765878954	JPMORGAN CHASE BANK, N.A.	3rd First National Plaza Chicago, IL 60602	William Sholten 312-732-4600 william.sholten@jpmorgan.com	GMAC Mortgage, LLC	Custodial
1490	765878962	JPMORGAN CHASE BANK, N.A.	3rd First National Plaza Chicago, IL 60602	William Sholten 312-732-4600 william.sholten@jpmorgan.com	GMAC Mortgage, LLC	Custodial
1491	765878970	JPMORGAN CHASE BANK, N.A.	3rd First National Plaza Chicago, IL 60602	William Sholten 312-732-4600 william.sholten@jpmorgan.com	GMAC Mortgage, LLC	Custodial
1492	765878988	JPMORGAN CHASE BANK, N.A.	3rd First National Plaza Chicago, IL 60602	William Sholten 312-732-4600 william.sholten@jpmorgan.com	GMAC Mortgage, LLC	Custodial
1493	765879044	JPMORGAN CHASE BANK, N.A.	3rd First National Plaza Chicago, IL 60602	William Sholten 312-732-4600 william.sholten@jpmorgan.com	GMAC Mortgage, LLC	Custodial
1494	765879051	JPMORGAN CHASE BANK, N.A.	3rd First National Plaza Chicago, IL 60602	William Sholten 312-732-4600 william.sholten@jpmorgan.com	GMAC Mortgage, LLC	Custodial
1495	765879069	JPMORGAN CHASE BANK, N.A.	3rd First National Plaza Chicago, IL 60602	William Sholten 312-732-4600 william.sholten@jpmorgan.com	GMAC Mortgage, LLC	Custodial
1496	765879077	JPMORGAN CHASE BANK, N.A.	3rd First National Plaza Chicago, IL 60602	William Sholten 312-732-4600 william.sholten@jpmorgan.com	GMAC Mortgage, LLC	Custodial
1497	765879101	JPMORGAN CHASE BANK, N.A.	3rd First National Plaza Chicago, IL 60602	William Sholten 312-732-4600 william.sholten@jpmorgan.com	GMAC Mortgage, LLC	Custodial
1498	765879119	JPMORGAN CHASE BANK, N.A.	3rd First National Plaza Chicago, IL 60602	William Sholten 312-732-4600 william.sholten@jpmorgan.com	GMAC Mortgage, LLC	Custodial
1499	765879184	JPMORGAN CHASE BANK, N.A.	3rd First National Plaza Chicago, IL 60602	William Sholten 312-732-4600 william.sholten@jpmorgan.com	GMAC Mortgage, LLC	Custodial
1500	765884788	JPMORGAN CHASE BANK, N.A.	3rd First National Plaza Chicago, IL 60602	William Sholten 312-732-4600 william.sholten@jpmorgan.com	GMAC Mortgage, LLC	Custodial
1501	765884903	JPMORGAN CHASE BANK, N.A.	3rd First National Plaza Chicago, IL 60602	William Sholten 312-732-4600 william.sholten@jpmorgan.com	GMAC Mortgage, LLC	Custodial
1502	765884911	JPMORGAN CHASE BANK, N.A.	3rd First National Plaza Chicago, IL 60602	William Sholten 312-732-4600 william.sholten@jpmorgan.com	GMAC Mortgage, LLC	Custodial
1503	765884929	JPMORGAN CHASE BANK, N.A.	3rd First National Plaza Chicago, IL 60602	William Sholten 312-732-4600 william.sholten@jpmorgan.com	GMAC Mortgage, LLC	Custodial
1504	765884945	JPMORGAN CHASE BANK, N.A.	3rd First National Plaza Chicago, IL 60602	William Sholten 312-732-4600 william.sholten@jpmorgan.com	GMAC Mortgage, LLC	Custodial
1505	765884952	JPMORGAN CHASE BANK, N.A.	3rd First National Plaza Chicago, IL 60602	William Sholten 312-732-4600 william.sholten@jpmorgan.com	GMAC Mortgage, LLC	Custodial

Privileged and Confidential

Exhibit B - Bank Accounts

Ref #	Account Number	Bank	Address	Contact	Corporate/Company Code	Account Type
1506	765884978	JPMORGAN CHASE BANK, N.A.	3rd First National Plaza Chicago, IL 60602	William Sholten 312-732-4600 william.sholten@jpmorgan.com	GMAC Mortgage, LLC	Custodial
1507	765884986	JPMORGAN CHASE BANK, N.A.	3rd First National Plaza Chicago, IL 60602	William Sholten 312-732-4600 william.sholten@jpmorgan.com	GMAC Mortgage, LLC	Custodial
1508	765884994	JPMORGAN CHASE BANK, N.A.	3rd First National Plaza Chicago, IL 60602	William Sholten 312-732-4600 william.sholten@jpmorgan.com	GMAC Mortgage, LLC	Custodial
1509	765885009	JPMORGAN CHASE BANK, N.A.	3rd First National Plaza Chicago, IL 60602	William Sholten 312-732-4600 william.sholten@jpmorgan.com	GMAC Mortgage, LLC	Custodial
1510	765885025	JPMORGAN CHASE BANK, N.A.	3rd First National Plaza Chicago, IL 60602	William Sholten 312-732-4600 william.sholten@jpmorgan.com	GMAC Mortgage, LLC	Custodial
1511	765885033	JPMORGAN CHASE BANK, N.A.	3rd First National Plaza Chicago, IL 60602	William Sholten 312-732-4600 william.sholten@jpmorgan.com	GMAC Mortgage, LLC	Custodial
1512	765885058	JPMORGAN CHASE BANK, N.A.	3rd First National Plaza Chicago, IL 60602	William Sholten 312-732-4600 william.sholten@jpmorgan.com	GMAC Mortgage, LLC	Custodial
1513	765885108	JPMORGAN CHASE BANK, N.A.	3rd First National Plaza Chicago, IL 60602	William Sholten 312-732-4600 william.sholten@jpmorgan.com	GMAC Mortgage, LLC	Custodial
1514	765885116	JPMORGAN CHASE BANK, N.A.	3rd First National Plaza Chicago, IL 60602	William Sholten 312-732-4600 william.sholten@jpmorgan.com	GMAC Mortgage, LLC	Custodial
1515	765885124	JPMORGAN CHASE BANK, N.A.	3rd First National Plaza Chicago, IL 60602	William Sholten 312-732-4600 william.sholten@jpmorgan.com	GMAC Mortgage, LLC	Custodial
1516	765885157	JPMORGAN CHASE BANK, N.A.	3rd First National Plaza Chicago, IL 60602	William Sholten 312-732-4600 william.sholten@jpmorgan.com	GMAC Mortgage, LLC	Custodial
1517	765885165	JPMORGAN CHASE BANK, N.A.	3rd First National Plaza Chicago, IL 60602	William Sholten 312-732-4600 william.sholten@jpmorgan.com	GMAC Mortgage, LLC	Custodial
1518	765885173	JPMORGAN CHASE BANK, N.A.	3rd First National Plaza Chicago, IL 60602	William Sholten 312-732-4600 william.sholten@jpmorgan.com	GMAC Mortgage, LLC	Custodial
1519	765885181	JPMORGAN CHASE BANK, N.A.	3rd First National Plaza Chicago, IL 60602	William Sholten 312-732-4600 william.sholten@jpmorgan.com	GMAC Mortgage, LLC	Custodial
1520	765885207	JPMORGAN CHASE BANK, N.A.	3rd First National Plaza Chicago, IL 60602	William Sholten 312-732-4600 william.sholten@jpmorgan.com	GMAC Mortgage, LLC	Custodial
1521	765885215	JPMORGAN CHASE BANK, N.A.	3rd First National Plaza Chicago, IL 60602	William Sholten 312-732-4600 william.sholten@jpmorgan.com	GMAC Mortgage, LLC	Custodial
1522	765885223	JPMORGAN CHASE BANK, N.A.	3rd First National Plaza Chicago, IL 60602	William Sholten 312-732-4600 william.sholten@jpmorgan.com	GMAC Mortgage, LLC	Custodial
1523	765885231	JPMORGAN CHASE BANK, N.A.	3rd First National Plaza Chicago, IL 60602	William Sholten 312-732-4600 william.sholten@jpmorgan.com	GMAC Mortgage, LLC	Custodial
1524	765885249	JPMORGAN CHASE BANK, N.A.	3rd First National Plaza Chicago, IL 60602	William Sholten 312-732-4600 william.sholten@jpmorgan.com	GMAC Mortgage, LLC	Custodial
1525	765885256	JPMORGAN CHASE BANK, N.A.	3rd First National Plaza Chicago, IL 60602	William Sholten 312-732-4600 william.sholten@jpmorgan.com	GMAC Mortgage, LLC	Custodial
1526	765885363	JPMORGAN CHASE BANK, N.A.	3rd First National Plaza Chicago, IL 60602	William Sholten 312-732-4600 william.sholten@jpmorgan.com	GMAC Mortgage, LLC	Custodial
1527	765885371	JPMORGAN CHASE BANK, N.A.	3rd First National Plaza Chicago, IL 60602	William Sholten 312-732-4600 william.sholten@jpmorgan.com	GMAC Mortgage, LLC	Custodial
1528	765885389	JPMORGAN CHASE BANK, N.A.	3rd First National Plaza Chicago, IL 60602	William Sholten 312-732-4600 william.sholten@jpmorgan.com	GMAC Mortgage, LLC	Custodial
1529	765885397	JPMORGAN CHASE BANK, N.A.	3rd First National Plaza Chicago, IL 60602	William Sholten 312-732-4600 william.sholten@jpmorgan.com	GMAC Mortgage, LLC	Custodial
1530	765885413	JPMORGAN CHASE BANK, N.A.	3rd First National Plaza Chicago, IL 60602	William Sholten 312-732-4600 william.sholten@jpmorgan.com	GMAC Mortgage, LLC	Custodial
1531	765885447	JPMORGAN CHASE BANK, N.A.	3rd First National Plaza Chicago, IL 60602	William Sholten 312-732-4600 william.sholten@jpmorgan.com	GMAC Mortgage, LLC	Custodial
1532	765885454	JPMORGAN CHASE BANK, N.A.	3rd First National Plaza Chicago, IL 60602	William Sholten 312-732-4600 william.sholten@jpmorgan.com	GMAC Mortgage, LLC	Custodial
1533	765885462	JPMORGAN CHASE BANK, N.A.	3rd First National Plaza Chicago, IL 60602	William Sholten 312-732-4600 william.sholten@jpmorgan.com	GMAC Mortgage, LLC	Custodial
1534	765885470	JPMORGAN CHASE BANK, N.A.	3rd First National Plaza Chicago, IL 60602	William Sholten 312-732-4600 william.sholten@jpmorgan.com	GMAC Mortgage, LLC	Custodial
1535	765885488	JPMORGAN CHASE BANK, N.A.	3rd First National Plaza Chicago, IL 60602	William Sholten 312-732-4600 william.sholten@jpmorgan.com	GMAC Mortgage, LLC	Custodial
1536	765885504	JPMORGAN CHASE BANK, N.A.	3rd First National Plaza Chicago, IL 60602	William Sholten 312-732-4600 william.sholten@jpmorgan.com	GMAC Mortgage, LLC	Custodial
1537	765885520	JPMORGAN CHASE BANK, N.A.	3rd First National Plaza Chicago, IL 60602	William Sholten 312-732-4600 william.sholten@jpmorgan.com	GMAC Mortgage, LLC	Custodial
1538	765885538	JPMORGAN CHASE BANK, N.A.	3rd First National Plaza Chicago, IL 60602	William Sholten 312-732-4600 william.sholten@jpmorgan.com	GMAC Mortgage, LLC	Custodial
1539	765885546	JPMORGAN CHASE BANK, N.A.	3rd First National Plaza Chicago, IL 60602	William Sholten 312-732-4600 william.sholten@jpmorgan.com	GMAC Mortgage, LLC	Custodial
1540	765885553	JPMORGAN CHASE BANK, N.A.	3rd First National Plaza Chicago, IL 60602	William Sholten 312-732-4600 william.sholten@jpmorgan.com	GMAC Mortgage, LLC	Custodial
1541	765885561	JPMORGAN CHASE BANK, N.A.	3rd First National Plaza Chicago, IL 60602	William Sholten 312-732-4600 william.sholten@jpmorgan.com	GMAC Mortgage, LLC	Custodial
1542	765885579	JPMORGAN CHASE BANK, N.A.	3rd First National Plaza Chicago, IL 60602	William Sholten 312-732-4600 william.sholten@jpmorgan.com	GMAC Mortgage, LLC	Custodial
1543	765885603	JPMORGAN CHASE BANK, N.A.	3rd First National Plaza Chicago, IL 60602	William Sholten 312-732-4600 william.sholten@jpmorgan.com	GMAC Mortgage, LLC	Custodial
1544	765885611	JPMORGAN CHASE BANK, N.A.	3rd First National Plaza Chicago, IL 60602	William Sholten 312-732-4600 william.sholten@jpmorgan.com	GMAC Mortgage, LLC	Custodial
1545	765885678	JPMORGAN CHASE BANK, N.A.	3rd First National Plaza Chicago, IL 60602	William Sholten 312-732-4600 william.sholten@jpmorgan.com	GMAC Mortgage, LLC	Custodial
1546	765885686	JPMORGAN CHASE BANK, N.A.	3rd First National Plaza Chicago, IL 60602	William Sholten 312-732-4600 william.sholten@jpmorgan.com	GMAC Mortgage, LLC	Custodial
1547	765885694	JPMORGAN CHASE BANK, N.A.	3rd First National Plaza Chicago, IL 60602	William Sholten 312-732-4600 william.sholten@jpmorgan.com	GMAC Mortgage, LLC	Custodial
1548	765885702	JPMORGAN CHASE BANK, N.A.	3rd First National Plaza Chicago, IL 60602	William Sholten 312-732-4600 william.sholten@jpmorgan.com	GMAC Mortgage, LLC	Custodial

Privileged and Confidential

Exhibit B - Bank Accounts

Ref #	Account Number	Bank	Address	Contact	Corporate/Company Code	Account Type
1549	765885710	JPMORGAN CHASE BANK, N.A.	3rd First National Plaza Chicago, IL 60602	William Sholten 312-732-4600 william.sholten@jpmorgan.com	GMAC Mortgage, LLC	Custodial
1550	765885728	JPMORGAN CHASE BANK, N.A.	3rd First National Plaza Chicago, IL 60602	William Sholten 312-732-4600 william.sholten@jpmorgan.com	GMAC Mortgage, LLC	Custodial
1551	765885736	JPMORGAN CHASE BANK, N.A.	3rd First National Plaza Chicago, IL 60602	William Sholten 312-732-4600 william.sholten@jpmorgan.com	GMAC Mortgage, LLC	Custodial
1552	765885751	JPMORGAN CHASE BANK, N.A.	3rd First National Plaza Chicago, IL 60602	William Sholten 312-732-4600 william.sholten@jpmorgan.com	GMAC Mortgage, LLC	Custodial
1553	765887369	JPMORGAN CHASE BANK, N.A.	3rd First National Plaza Chicago, IL 60602	William Sholten 312-732-4600 william.sholten@jpmorgan.com	Residential Funding Company, LLC	Operating - Other
1554	765905468	JPMORGAN CHASE BANK, N.A.	3rd First National Plaza Chicago, IL 60602	William Sholten 312-732-4600 william.sholten@jpmorgan.com	DOA Holding Properties, LLC	Operating - General
1555	765905476	JPMORGAN CHASE BANK, N.A.	3rd First National Plaza Chicago, IL 60602	William Sholten 312-732-4600 william.sholten@jpmorgan.com	Residential Funding Company, LLC	Operating - General
1556	777161191	JPMORGAN CHASE BANK, N.A.	3rd First National Plaza Chicago, IL 60602	William Sholten 312-732-4600 william.sholten@jpmorgan.com	GMAC Mortgage, LLC	Custodial
1557	777161217	JPMORGAN CHASE BANK, N.A.	3rd First National Plaza Chicago, IL 60602	William Sholten 312-732-4600 william.sholten@jpmorgan.com	GMAC Mortgage, LLC	Custodial
1558	777161225	JPMORGAN CHASE BANK, N.A.	3rd First National Plaza Chicago, IL 60602	William Sholten 312-732-4600 william.sholten@jpmorgan.com	GMAC Mortgage, LLC	Custodial
1559	777161266	JPMORGAN CHASE BANK, N.A.	3rd First National Plaza Chicago, IL 60602	William Sholten 312-732-4600 william.sholten@jpmorgan.com	GMAC Mortgage, LLC	Custodial
1560	777161274	JPMORGAN CHASE BANK, N.A.	3rd First National Plaza Chicago, IL 60602	William Sholten 312-732-4600 william.sholten@jpmorgan.com	GMAC Mortgage, LLC	Custodial
1561	777161282	JPMORGAN CHASE BANK, N.A.	3rd First National Plaza Chicago, IL 60602	William Sholten 312-732-4600 william.sholten@jpmorgan.com	GMAC Mortgage, LLC	Custodial
1562	777161365	JPMORGAN CHASE BANK, N.A.	3rd First National Plaza Chicago, IL 60602	William Sholten 312-732-4600 william.sholten@jpmorgan.com	GMAC Mortgage, LLC	Custodial
1563	777161373	JPMORGAN CHASE BANK, N.A.	3rd First National Plaza Chicago, IL 60602	William Sholten 312-732-4600 william.sholten@jpmorgan.com	GMAC Mortgage, LLC	Custodial
1564	777161381	JPMORGAN CHASE BANK, N.A.	3rd First National Plaza Chicago, IL 60602	William Sholten 312-732-4600 william.sholten@jpmorgan.com	GMAC Mortgage, LLC	Custodial
1565	777161399	JPMORGAN CHASE BANK, N.A.	3rd First National Plaza Chicago, IL 60602	William Sholten 312-732-4600 william.sholten@jpmorgan.com	GMAC Mortgage, LLC	Custodial
1566	777161423	JPMORGAN CHASE BANK, N.A.	3rd First National Plaza Chicago, IL 60602	William Sholten 312-732-4600 william.sholten@jpmorgan.com	GMAC Mortgage, LLC	Custodial
1567	777161431	JPMORGAN CHASE BANK, N.A.	3rd First National Plaza Chicago, IL 60602	William Sholten 312-732-4600 william.sholten@jpmorgan.com	GMAC Mortgage, LLC	Custodial
1568	777161449	JPMORGAN CHASE BANK, N.A.	3rd First National Plaza Chicago, IL 60602	William Sholten 312-732-4600 william.sholten@jpmorgan.com	GMAC Mortgage, LLC	Custodial
1569	777161456	JPMORGAN CHASE BANK, N.A.	3rd First National Plaza Chicago, IL 60602	William Sholten 312-732-4600 william.sholten@jpmorgan.com	GMAC Mortgage, LLC	Custodial
1570	777161472	JPMORGAN CHASE BANK, N.A.	3rd First National Plaza Chicago, IL 60602	William Sholten 312-732-4600 william.sholten@jpmorgan.com	GMAC Mortgage, LLC	Custodial
1571	777161480	JPMORGAN CHASE BANK, N.A.	3rd First National Plaza Chicago, IL 60602	William Sholten 312-732-4600 william.sholten@jpmorgan.com	GMAC Mortgage, LLC	Custodial
1572	777161498	JPMORGAN CHASE BANK, N.A.	3rd First National Plaza Chicago, IL 60602	William Sholten 312-732-4600 william.sholten@jpmorgan.com	GMAC Mortgage, LLC	Custodial
1573	777161506	JPMORGAN CHASE BANK, N.A.	3rd First National Plaza Chicago, IL 60602	William Sholten 312-732-4600 william.sholten@jpmorgan.com	GMAC Mortgage, LLC	Custodial
1574	777161514	JPMORGAN CHASE BANK, N.A.	3rd First National Plaza Chicago, IL 60602	William Sholten 312-732-4600 william.sholten@jpmorgan.com	GMAC Mortgage, LLC	Custodial
1575	777161522	JPMORGAN CHASE BANK, N.A.	3rd First National Plaza Chicago, IL 60602	William Sholten 312-732-4600 william.sholten@jpmorgan.com	GMAC Mortgage, LLC	Custodial
1576	777161639	JPMORGAN CHASE BANK, N.A.	3rd First National Plaza Chicago, IL 60602	William Sholten 312-732-4600 william.sholten@jpmorgan.com	GMAC Mortgage, LLC	Custodial
1577	777161647	JPMORGAN CHASE BANK, N.A.	3rd First National Plaza Chicago, IL 60602	William Sholten 312-732-4600 william.sholten@jpmorgan.com	GMAC Mortgage, LLC	Custodial
1578	777161654	JPMORGAN CHASE BANK, N.A.	3rd First National Plaza Chicago, IL 60602	William Sholten 312-732-4600 william.sholten@jpmorgan.com	GMAC Mortgage, LLC	Custodial
1579	777161662	JPMORGAN CHASE BANK, N.A.	3rd First National Plaza Chicago, IL 60602	William Sholten 312-732-4600 william.sholten@jpmorgan.com	GMAC Mortgage, LLC	Custodial
1580	777161688	JPMORGAN CHASE BANK, N.A.	3rd First National Plaza Chicago, IL 60602	William Sholten 312-732-4600 william.sholten@jpmorgan.com	GMAC Mortgage, LLC	Custodial
1581	777161712	JPMORGAN CHASE BANK, N.A.	3rd First National Plaza Chicago, IL 60602	William Sholten 312-732-4600 william.sholten@jpmorgan.com	GMAC Mortgage, LLC	Custodial
1582	777161720	JPMORGAN CHASE BANK, N.A.	3rd First National Plaza Chicago, IL 60602	William Sholten 312-732-4600 william.sholten@jpmorgan.com	GMAC Mortgage, LLC	Custodial
1583	777161738	JPMORGAN CHASE BANK, N.A.	3rd First National Plaza Chicago, IL 60602	William Sholten 312-732-4600 william.sholten@jpmorgan.com	GMAC Mortgage, LLC	Custodial
1584	777161746	JPMORGAN CHASE BANK, N.A.	3rd First National Plaza Chicago, IL 60602	William Sholten 312-732-4600 william.sholten@jpmorgan.com	GMAC Mortgage, LLC	Custodial
1585	777161753	JPMORGAN CHASE BANK, N.A.	3rd First National Plaza Chicago, IL 60602	William Sholten 312-732-4600 william.sholten@jpmorgan.com	GMAC Mortgage, LLC	Custodial
1586	777161779	JPMORGAN CHASE BANK, N.A.	3rd First National Plaza Chicago, IL 60602	William Sholten 312-732-4600 william.sholten@jpmorgan.com	GMAC Mortgage, LLC	Custodial
1587	777161795	JPMORGAN CHASE BANK, N.A.	3rd First National Plaza Chicago, IL 60602	William Sholten 312-732-4600 william.sholten@jpmorgan.com	GMAC Mortgage, LLC	Custodial
1588	777161803	JPMORGAN CHASE BANK, N.A.	3rd First National Plaza Chicago, IL 60602	William Sholten 312-732-4600 william.sholten@jpmorgan.com	GMAC Mortgage, LLC	Custodial
1589	777161811	JPMORGAN CHASE BANK, N.A.	3rd First National Plaza Chicago, IL 60602	William Sholten 312-732-4600 william.sholten@jpmorgan.com	GMAC Mortgage, LLC	Custodial
1590	777161829	JPMORGAN CHASE BANK, N.A.	3rd First National Plaza Chicago, IL 60602	William Sholten 312-732-4600 william.sholten@jpmorgan.com	GMAC Mortgage, LLC	Custodial
1591	777161837	JPMORGAN CHASE BANK, N.A.	3rd First National Plaza Chicago, IL 60602	William Sholten 312-732-4600 william.sholten@jpmorgan.com	GMAC Mortgage, LLC	Custodial

Privileged and Confidential

Exhibit B - Bank Accounts

Ref #	Account Number	Bank	Address	Contact	Corporate/Company Code	Account Type
1592	777161845	JPMORGAN CHASE BANK, N.A.	3rd First National Plaza Chicago, IL 60602	William Sholten 312-732-4600 william.sholten@jpmorgan.com	GMAC Mortgage, LLC	Custodial
1593	777161878	JPMORGAN CHASE BANK, N.A.	3rd First National Plaza Chicago, IL 60602	William Sholten 312-732-4600 william.sholten@jpmorgan.com	GMAC Mortgage, LLC	Custodial
1594	777161886	JPMORGAN CHASE BANK, N.A.	3rd First National Plaza Chicago, IL 60602	William Sholten 312-732-4600 william.sholten@jpmorgan.com	GMAC Mortgage, LLC	Custodial
1595	777161944	JPMORGAN CHASE BANK, N.A.	3rd First National Plaza Chicago, IL 60602	William Sholten 312-732-4600 william.sholten@jpmorgan.com	GMAC Mortgage, LLC	Custodial
1596	777161951	JPMORGAN CHASE BANK, N.A.	3rd First National Plaza Chicago, IL 60602	William Sholten 312-732-4600 william.sholten@jpmorgan.com	GMAC Mortgage, LLC	Custodial
1597	777161969	JPMORGAN CHASE BANK, N.A.	3rd First National Plaza Chicago, IL 60602	William Sholten 312-732-4600 william.sholten@jpmorgan.com	GMAC Mortgage, LLC	Custodial
1598	777161977	JPMORGAN CHASE BANK, N.A.	3rd First National Plaza Chicago, IL 60602	William Sholten 312-732-4600 william.sholten@jpmorgan.com	GMAC Mortgage, LLC	Custodial
1599	777161985	JPMORGAN CHASE BANK, N.A.	3rd First National Plaza Chicago, IL 60602	William Sholten 312-732-4600 william.sholten@jpmorgan.com	GMAC Mortgage, LLC	Custodial
1600	777161993	JPMORGAN CHASE BANK, N.A.	3rd First National Plaza Chicago, IL 60602	William Sholten 312-732-4600 william.sholten@jpmorgan.com	GMAC Mortgage, LLC	Custodial
1601	777162009	JPMORGAN CHASE BANK, N.A.	3rd First National Plaza Chicago, IL 60602	William Sholten 312-732-4600 william.sholten@jpmorgan.com	GMAC Mortgage, LLC	Custodial
1602	777162025	JPMORGAN CHASE BANK, N.A.	3rd First National Plaza Chicago, IL 60602	William Sholten 312-732-4600 william.sholten@jpmorgan.com	GMAC Mortgage, LLC	Custodial
1603	777162033	JPMORGAN CHASE BANK, N.A.	3rd First National Plaza Chicago, IL 60602	William Sholten 312-732-4600 william.sholten@jpmorgan.com	GMAC Mortgage, LLC	Custodial
1604	777162058	JPMORGAN CHASE BANK, N.A.	3rd First National Plaza Chicago, IL 60602	William Sholten 312-732-4600 william.sholten@jpmorgan.com	GMAC Mortgage, LLC	Custodial
1605	777162066	JPMORGAN CHASE BANK, N.A.	3rd First National Plaza Chicago, IL 60602	William Sholten 312-732-4600 william.sholten@jpmorgan.com	GMAC Mortgage, LLC	Custodial
1606	777162108	JPMORGAN CHASE BANK, N.A.	3rd First National Plaza Chicago, IL 60602	William Sholten 312-732-4600 william.sholten@jpmorgan.com	GMAC Mortgage, LLC	Custodial
1607	777162116	JPMORGAN CHASE BANK, N.A.	3rd First National Plaza Chicago, IL 60602	William Sholten 312-732-4600 william.sholten@jpmorgan.com	GMAC Mortgage, LLC	Custodial
1608	777162124	JPMORGAN CHASE BANK, N.A.	3rd First National Plaza Chicago, IL 60602	William Sholten 312-732-4600 william.sholten@jpmorgan.com	GMAC Mortgage, LLC	Custodial
1609	777162207	JPMORGAN CHASE BANK, N.A.	3rd First National Plaza Chicago, IL 60602	William Sholten 312-732-4600 william.sholten@jpmorgan.com	GMAC Mortgage, LLC	Custodial
1610	777162215	JPMORGAN CHASE BANK, N.A.	3rd First National Plaza Chicago, IL 60602	William Sholten 312-732-4600 william.sholten@jpmorgan.com	GMAC Mortgage, LLC	Custodial
1611	777162223	JPMORGAN CHASE BANK, N.A.	3rd First National Plaza Chicago, IL 60602	William Sholten 312-732-4600 william.sholten@jpmorgan.com	GMAC Mortgage, LLC	Custodial
1612	777162256	JPMORGAN CHASE BANK, N.A.	3rd First National Plaza Chicago, IL 60602	William Sholten 312-732-4600 william.sholten@jpmorgan.com	GMAC Mortgage, LLC	Custodial
1613	777162264	JPMORGAN CHASE BANK, N.A.	3rd First National Plaza Chicago, IL 60602	William Sholten 312-732-4600 william.sholten@jpmorgan.com	GMAC Mortgage, LLC	Custodial
1614	777162272	JPMORGAN CHASE BANK, N.A.	3rd First National Plaza Chicago, IL 60602	William Sholten 312-732-4600 william.sholten@jpmorgan.com	GMAC Mortgage, LLC	Custodial
1615	777162280	JPMORGAN CHASE BANK, N.A.	3rd First National Plaza Chicago, IL 60602	William Sholten 312-732-4600 william.sholten@jpmorgan.com	GMAC Mortgage, LLC	Custodial
1616	777162298	JPMORGAN CHASE BANK, N.A.	3rd First National Plaza Chicago, IL 60602	William Sholten 312-732-4600 william.sholten@jpmorgan.com	GMAC Mortgage, LLC	Custodial
1617	777162306	JPMORGAN CHASE BANK, N.A.	3rd First National Plaza Chicago, IL 60602	William Sholten 312-732-4600 william.sholten@jpmorgan.com	GMAC Mortgage, LLC	Custodial
1618	777162314	JPMORGAN CHASE BANK, N.A.	3rd First National Plaza Chicago, IL 60602	William Sholten 312-732-4600 william.sholten@jpmorgan.com	GMAC Mortgage, LLC	Custodial
1619	777162322	JPMORGAN CHASE BANK, N.A.	3rd First National Plaza Chicago, IL 60602	William Sholten 312-732-4600 william.sholten@jpmorgan.com	GMAC Mortgage, LLC	Custodial
1620	777162330	JPMORGAN CHASE BANK, N.A.	3rd First National Plaza Chicago, IL 60602	William Sholten 312-732-4600 william.sholten@jpmorgan.com	GMAC Mortgage, LLC	Custodial
1621	777162363	JPMORGAN CHASE BANK, N.A.	3rd First National Plaza Chicago, IL 60602	William Sholten 312-732-4600 william.sholten@jpmorgan.com	GMAC Mortgage, LLC	Custodial
1622	777162397	JPMORGAN CHASE BANK, N.A.	3rd First National Plaza Chicago, IL 60602	William Sholten 312-732-4600 william.sholten@jpmorgan.com	GMAC Mortgage, LLC	Custodial
1623	777162405	JPMORGAN CHASE BANK, N.A.	3rd First National Plaza Chicago, IL 60602	William Sholten 312-732-4600 william.sholten@jpmorgan.com	GMAC Mortgage, LLC	Custodial
1624	777162413	JPMORGAN CHASE BANK, N.A.	3rd First National Plaza Chicago, IL 60602	William Sholten 312-732-4600 william.sholten@jpmorgan.com	GMAC Mortgage, LLC	Custodial
1625	777162421	JPMORGAN CHASE BANK, N.A.	3rd First National Plaza Chicago, IL 60602	William Sholten 312-732-4600 william.sholten@jpmorgan.com	GMAC Mortgage, LLC	Custodial
1626	777162454	JPMORGAN CHASE BANK, N.A.	3rd First National Plaza Chicago, IL 60602	William Sholten 312-732-4600 william.sholten@jpmorgan.com	GMAC Mortgage, LLC	Custodial
1627	777162462	JPMORGAN CHASE BANK, N.A.	3rd First National Plaza Chicago, IL 60602	William Sholten 312-732-4600 william.sholten@jpmorgan.com	GMAC Mortgage, LLC	Custodial
1628	777162520	JPMORGAN CHASE BANK, N.A.	3rd First National Plaza Chicago, IL 60602	William Sholten 312-732-4600 william.sholten@jpmorgan.com	GMAC Mortgage, LLC	Custodial
1629	777162611	JPMORGAN CHASE BANK, N.A.	3rd First National Plaza Chicago, IL 60602	William Sholten 312-732-4600 william.sholten@jpmorgan.com	GMAC Mortgage, LLC	Custodial
1630	777162629	JPMORGAN CHASE BANK, N.A.	3rd First National Plaza Chicago, IL 60602	William Sholten 312-732-4600 william.sholten@jpmorgan.com	GMAC Mortgage, LLC	Custodial
1631	777162637	JPMORGAN CHASE BANK, N.A.	3rd First National Plaza Chicago, IL 60602	William Sholten 312-732-4600 william.sholten@jpmorgan.com	GMAC Mortgage, LLC	Custodial
1632	777162686	JPMORGAN CHASE BANK, N.A.	3rd First National Plaza Chicago, IL 60602	William Sholten 312-732-4600 william.sholten@jpmorgan.com	GMAC Mortgage, LLC	Custodial
1633	777162694	JPMORGAN CHASE BANK, N.A.	3rd First National Plaza Chicago, IL 60602	William Sholten 312-732-4600 william.sholten@jpmorgan.com	GMAC Mortgage, LLC	Custodial
1634	777162702	JPMORGAN CHASE BANK, N.A.	3rd First National Plaza Chicago, IL 60602	William Sholten 312-732-4600 william.sholten@jpmorgan.com	GMAC Mortgage, LLC	Custodial

Privileged and Confidential

Exhibit B - Bank Accounts

Ref #	Account Number	Bank	Address	Contact	Corporate/Company Code	Account Type
1635	777162710	JPMORGAN CHASE BANK, N.A.	3rd First National Plaza Chicago, IL 60602	William Sholten 312-732-4600 william.sholten@jpmorgan.com	GMAC Mortgage, LLC	Custodial
1636	777162769	JPMORGAN CHASE BANK, N.A.	3rd First National Plaza Chicago, IL 60602	William Sholten 312-732-4600 william.sholten@jpmorgan.com	GMAC Mortgage, LLC	Custodial
1637	777162777	JPMORGAN CHASE BANK, N.A.	3rd First National Plaza Chicago, IL 60602	William Sholten 312-732-4600 william.sholten@jpmorgan.com	GMAC Mortgage, LLC	Custodial
1638	777162785	JPMORGAN CHASE BANK, N.A.	3rd First National Plaza Chicago, IL 60602	William Sholten 312-732-4600 william.sholten@jpmorgan.com	GMAC Mortgage, LLC	Custodial
1639	777162793	JPMORGAN CHASE BANK, N.A.	3rd First National Plaza Chicago, IL 60602	William Sholten 312-732-4600 william.sholten@jpmorgan.com	GMAC Mortgage, LLC	Custodial
1640	777162801	JPMORGAN CHASE BANK, N.A.	3rd First National Plaza Chicago, IL 60602	William Sholten 312-732-4600 william.sholten@jpmorgan.com	GMAC Mortgage, LLC	Custodial
1641	777162819	JPMORGAN CHASE BANK, N.A.	3rd First National Plaza Chicago, IL 60602	William Sholten 312-732-4600 william.sholten@jpmorgan.com	GMAC Mortgage, LLC	Custodial
1642	777162827	JPMORGAN CHASE BANK, N.A.	3rd First National Plaza Chicago, IL 60602	William Sholten 312-732-4600 william.sholten@jpmorgan.com	GMAC Mortgage, LLC	Custodial
1643	777162884	JPMORGAN CHASE BANK, N.A.	3rd First National Plaza Chicago, IL 60602	William Sholten 312-732-4600 william.sholten@jpmorgan.com	GMAC Mortgage, LLC	Custodial
1644	777162892	JPMORGAN CHASE BANK, N.A.	3rd First National Plaza Chicago, IL 60602	William Sholten 312-732-4600 william.sholten@jpmorgan.com	GMAC Mortgage, LLC	Custodial
1645	777162900	JPMORGAN CHASE BANK, N.A.	3rd First National Plaza Chicago, IL 60602	William Sholten 312-732-4600 william.sholten@jpmorgan.com	GMAC Mortgage, LLC	Custodial
1646	777162926	JPMORGAN CHASE BANK, N.A.	3rd First National Plaza Chicago, IL 60602	William Sholten 312-732-4600 william.sholten@jpmorgan.com	GMAC Mortgage, LLC	Custodial
1647	777162934	JPMORGAN CHASE BANK, N.A.	3rd First National Plaza Chicago, IL 60602	William Sholten 312-732-4600 william.sholten@jpmorgan.com	GMAC Mortgage, LLC	Custodial
1648	777162959	JPMORGAN CHASE BANK, N.A.	3rd First National Plaza Chicago, IL 60602	William Sholten 312-732-4600 william.sholten@jpmorgan.com	GMAC Mortgage, LLC	Custodial
1649	777163015	JPMORGAN CHASE BANK, N.A.	3rd First National Plaza Chicago, IL 60602	William Sholten 312-732-4600 william.sholten@jpmorgan.com	GMAC Mortgage, LLC	Custodial
1650	777163122	JPMORGAN CHASE BANK, N.A.	3rd First National Plaza Chicago, IL 60602	William Sholten 312-732-4600 william.sholten@jpmorgan.com	GMAC Mortgage, LLC	Custodial
1651	777163148	JPMORGAN CHASE BANK, N.A.	3rd First National Plaza Chicago, IL 60602	William Sholten 312-732-4600 william.sholten@jpmorgan.com	GMAC Mortgage, LLC	Custodial
1652	777163163	JPMORGAN CHASE BANK, N.A.	3rd First National Plaza Chicago, IL 60602	William Sholten 312-732-4600 william.sholten@jpmorgan.com	GMAC Mortgage, LLC	Custodial
1653	777163189	JPMORGAN CHASE BANK, N.A.	3rd First National Plaza Chicago, IL 60602	William Sholten 312-732-4600 william.sholten@jpmorgan.com	GMAC Mortgage, LLC	Custodial
1654	777163338	JPMORGAN CHASE BANK, N.A.	3rd First National Plaza Chicago, IL 60602	William Sholten 312-732-4600 william.sholten@jpmorgan.com	Passive Asset Transactions LLC	Operating - General
1655	777166927	JPMORGAN CHASE BANK, N.A.	3rd First National Plaza Chicago, IL 60602	William Sholten 312-732-4600 william.sholten@jpmorgan.com	GMAC Mortgage, LLC	Custodial
1656	777166943	JPMORGAN CHASE BANK, N.A.	3rd First National Plaza Chicago, IL 60602	William Sholten 312-732-4600 william.sholten@jpmorgan.com	GMAC Mortgage, LLC	Custodial
1657	777166968	JPMORGAN CHASE BANK, N.A.	3rd First National Plaza Chicago, IL 60602	William Sholten 312-732-4600 william.sholten@jpmorgan.com	GMAC Mortgage, LLC	Custodial
1658	777166984	JPMORGAN CHASE BANK, N.A.	3rd First National Plaza Chicago, IL 60602	William Sholten 312-732-4600 william.sholten@jpmorgan.com	GMAC Mortgage, LLC	Custodial
1659	777166992	JPMORGAN CHASE BANK, N.A.	3rd First National Plaza Chicago, IL 60602	William Sholten 312-732-4600 william.sholten@jpmorgan.com	GMAC Mortgage, LLC	Custodial
1660	777167008	JPMORGAN CHASE BANK, N.A.	3rd First National Plaza Chicago, IL 60602	William Sholten 312-732-4600 william.sholten@jpmorgan.com	GMAC Mortgage, LLC	Custodial
1661	777167016	JPMORGAN CHASE BANK, N.A.	3rd First National Plaza Chicago, IL 60602	William Sholten 312-732-4600 william.sholten@jpmorgan.com	GMAC Mortgage, LLC	Custodial
1662	777167024	JPMORGAN CHASE BANK, N.A.	3rd First National Plaza Chicago, IL 60602	William Sholten 312-732-4600 william.sholten@jpmorgan.com	GMAC Mortgage, LLC	Custodial
1663	777167032	JPMORGAN CHASE BANK, N.A.	3rd First National Plaza Chicago, IL 60602	William Sholten 312-732-4600 william.sholten@jpmorgan.com	GMAC Mortgage, LLC	Custodial
1664	777167040	JPMORGAN CHASE BANK, N.A.	3rd First National Plaza Chicago, IL 60602	William Sholten 312-732-4600 william.sholten@jpmorgan.com	GMAC Mortgage, LLC	Custodial
1665	777167057	JPMORGAN CHASE BANK, N.A.	3rd First National Plaza Chicago, IL 60602	William Sholten 312-732-4600 william.sholten@jpmorgan.com	GMAC Mortgage, LLC	Custodial
1666	777167065	JPMORGAN CHASE BANK, N.A.	3rd First National Plaza Chicago, IL 60602	William Sholten 312-732-4600 william.sholten@jpmorgan.com	GMAC Mortgage, LLC	Custodial
1667	777167073	JPMORGAN CHASE BANK, N.A.	3rd First National Plaza Chicago, IL 60602	William Sholten 312-732-4600 william.sholten@jpmorgan.com	GMAC Mortgage, LLC	Custodial
1668	777167081	JPMORGAN CHASE BANK, N.A.	3rd First National Plaza Chicago, IL 60602	William Sholten 312-732-4600 william.sholten@jpmorgan.com	GMAC Mortgage, LLC	Custodial
1669	777167099	JPMORGAN CHASE BANK, N.A.	3rd First National Plaza Chicago, IL 60602	William Sholten 312-732-4600 william.sholten@jpmorgan.com	GMAC Mortgage, LLC	Custodial
1670	777167107	JPMORGAN CHASE BANK, N.A.	3rd First National Plaza Chicago, IL 60602	William Sholten 312-732-4600 william.sholten@jpmorgan.com	GMAC Mortgage, LLC	Custodial
1671	777167115	JPMORGAN CHASE BANK, N.A.	3rd First National Plaza Chicago, IL 60602	William Sholten 312-732-4600 william.sholten@jpmorgan.com	GMAC Mortgage, LLC	Custodial
1672	777167123	JPMORGAN CHASE BANK, N.A.	3rd First National Plaza Chicago, IL 60602	William Sholten 312-732-4600 william.sholten@jpmorgan.com	GMAC Mortgage, LLC	Custodial
1673	777167131	JPMORGAN CHASE BANK, N.A.	3rd First National Plaza Chicago, IL 60602	William Sholten 312-732-4600 william.sholten@jpmorgan.com	GMAC Mortgage, LLC	Custodial
1674	777167149	JPMORGAN CHASE BANK, N.A.	3rd First National Plaza Chicago, IL 60602	William Sholten 312-732-4600 william.sholten@jpmorgan.com	GMAC Mortgage, LLC	Custodial
1675	777167156	JPMORGAN CHASE BANK, N.A.	3rd First National Plaza Chicago, IL 60602	William Sholten 312-732-4600 william.sholten@jpmorgan.com	GMAC Mortgage, LLC	Custodial
1676	777167164	JPMORGAN CHASE BANK, N.A.	3rd First National Plaza Chicago, IL 60602	William Sholten 312-732-4600 william.sholten@jpmorgan.com	GMAC Mortgage, LLC	Custodial
1677	777167172	JPMORGAN CHASE BANK, N.A.	3rd First National Plaza Chicago, IL 60602	William Sholten 312-732-4600 william.sholten@jpmorgan.com	GMAC Mortgage, LLC	Custodial

Privileged and Confidential

Exhibit B - Bank Accounts

Ref #	Account Number	Bank	Address	Contact	Corporate/Company Code	Account Type
1678	777167180	JPMORGAN CHASE BANK, N.A.	3rd First National Plaza Chicago, IL 60602	William Sholten 312-732-4600 william.sholten@jpmorgan.com	GMAC Mortgage, LLC	Custodial
1679	777167198	JPMORGAN CHASE BANK, N.A.	3rd First National Plaza Chicago, IL 60602	William Sholten 312-732-4600 william.sholten@jpmorgan.com	GMAC Mortgage, LLC	Custodial
1680	777167206	JPMORGAN CHASE BANK, N.A.	3rd First National Plaza Chicago, IL 60602	William Sholten 312-732-4600 william.sholten@jpmorgan.com	GMAC Mortgage, LLC	Custodial
1681	777167214	JPMORGAN CHASE BANK, N.A.	3rd First National Plaza Chicago, IL 60602	William Sholten 312-732-4600 william.sholten@jpmorgan.com	GMAC Mortgage, LLC	Custodial
1682	777167222	JPMORGAN CHASE BANK, N.A.	3rd First National Plaza Chicago, IL 60602	William Sholten 312-732-4600 william.sholten@jpmorgan.com	GMAC Mortgage, LLC	Custodial
1683	777167230	JPMORGAN CHASE BANK, N.A.	3rd First National Plaza Chicago, IL 60602	William Sholten 312-732-4600 william.sholten@jpmorgan.com	GMAC Mortgage, LLC	Custodial
1684	777167248	JPMORGAN CHASE BANK, N.A.	3rd First National Plaza Chicago, IL 60602	William Sholten 312-732-4600 william.sholten@jpmorgan.com	GMAC Mortgage, LLC	Custodial
1685	777167255	JPMORGAN CHASE BANK, N.A.	3rd First National Plaza Chicago, IL 60602	William Sholten 312-732-4600 william.sholten@jpmorgan.com	GMAC Mortgage, LLC	Custodial
1686	777167263	JPMORGAN CHASE BANK, N.A.	3rd First National Plaza Chicago, IL 60602	William Sholten 312-732-4600 william.sholten@jpmorgan.com	GMAC Mortgage, LLC	Custodial
1687	777167271	JPMORGAN CHASE BANK, N.A.	3rd First National Plaza Chicago, IL 60602	William Sholten 312-732-4600 william.sholten@jpmorgan.com	GMAC Mortgage, LLC	Custodial
1688	777167289	JPMORGAN CHASE BANK, N.A.	3rd First National Plaza Chicago, IL 60602	William Sholten 312-732-4600 william.sholten@jpmorgan.com	GMAC Mortgage, LLC	Custodial
1689	777167297	JPMORGAN CHASE BANK, N.A.	3rd First National Plaza Chicago, IL 60602	William Sholten 312-732-4600 william.sholten@jpmorgan.com	GMAC Mortgage, LLC	Custodial
1690	777167305	JPMORGAN CHASE BANK, N.A.	3rd First National Plaza Chicago, IL 60602	William Sholten 312-732-4600 william.sholten@jpmorgan.com	GMAC Mortgage, LLC	Custodial
1691	777167313	JPMORGAN CHASE BANK, N.A.	3rd First National Plaza Chicago, IL 60602	William Sholten 312-732-4600 william.sholten@jpmorgan.com	GMAC Mortgage, LLC	Custodial
1692	777167321	JPMORGAN CHASE BANK, N.A.	3rd First National Plaza Chicago, IL 60602	William Sholten 312-732-4600 william.sholten@jpmorgan.com	GMAC Mortgage, LLC	Custodial
1693	777167339	JPMORGAN CHASE BANK, N.A.	3rd First National Plaza Chicago, IL 60602	William Sholten 312-732-4600 william.sholten@jpmorgan.com	GMAC Mortgage, LLC	Custodial
1694	777167347	JPMORGAN CHASE BANK, N.A.	3rd First National Plaza Chicago, IL 60602	William Sholten 312-732-4600 william.sholten@jpmorgan.com	GMAC Mortgage, LLC	Custodial
1695	777167354	JPMORGAN CHASE BANK, N.A.	3rd First National Plaza Chicago, IL 60602	William Sholten 312-732-4600 william.sholten@jpmorgan.com	GMAC Mortgage, LLC	Custodial
1696	777167362	JPMORGAN CHASE BANK, N.A.	3rd First National Plaza Chicago, IL 60602	William Sholten 312-732-4600 william.sholten@jpmorgan.com	GMAC Mortgage, LLC	Custodial
1697	777167370	JPMORGAN CHASE BANK, N.A.	3rd First National Plaza Chicago, IL 60602	William Sholten 312-732-4600 william.sholten@jpmorgan.com	GMAC Mortgage, LLC	Custodial
1698	777167388	JPMORGAN CHASE BANK, N.A.	3rd First National Plaza Chicago, IL 60602	William Sholten 312-732-4600 william.sholten@jpmorgan.com	GMAC Mortgage, LLC	Custodial
1699	777167396	JPMORGAN CHASE BANK, N.A.	3rd First National Plaza Chicago, IL 60602	William Sholten 312-732-4600 william.sholten@jpmorgan.com	GMAC Mortgage, LLC	Custodial
1700	777167404	JPMORGAN CHASE BANK, N.A.	3rd First National Plaza Chicago, IL 60602	William Sholten 312-732-4600 william.sholten@jpmorgan.com	GMAC Mortgage, LLC	Custodial
1701	777167412	JPMORGAN CHASE BANK, N.A.	3rd First National Plaza Chicago, IL 60602	William Sholten 312-732-4600 william.sholten@jpmorgan.com	GMAC Mortgage, LLC	Custodial
1702	777167420	JPMORGAN CHASE BANK, N.A.	3rd First National Plaza Chicago, IL 60602	William Sholten 312-732-4600 william.sholten@jpmorgan.com	GMAC Mortgage, LLC	Custodial
1703	777167438	JPMORGAN CHASE BANK, N.A.	3rd First National Plaza Chicago, IL 60602	William Sholten 312-732-4600 william.sholten@jpmorgan.com	GMAC Mortgage, LLC	Custodial
1704	777167446	JPMORGAN CHASE BANK, N.A.	3rd First National Plaza Chicago, IL 60602	William Sholten 312-732-4600 william.sholten@jpmorgan.com	GMAC Mortgage, LLC	Custodial
1705	777167453	JPMORGAN CHASE BANK, N.A.	3rd First National Plaza Chicago, IL 60602	William Sholten 312-732-4600 william.sholten@jpmorgan.com	GMAC Mortgage, LLC	Custodial
1706	777167461	JPMORGAN CHASE BANK, N.A.	3rd First National Plaza Chicago, IL 60602	William Sholten 312-732-4600 william.sholten@jpmorgan.com	GMAC Mortgage, LLC	Custodial
1707	777167479	JPMORGAN CHASE BANK, N.A.	3rd First National Plaza Chicago, IL 60602	William Sholten 312-732-4600 william.sholten@jpmorgan.com	GMAC Mortgage, LLC	Custodial
1708	777167487	JPMORGAN CHASE BANK, N.A.	3rd First National Plaza Chicago, IL 60602	William Sholten 312-732-4600 william.sholten@jpmorgan.com	GMAC Mortgage, LLC	Custodial
1709	777167495	JPMORGAN CHASE BANK, N.A.	3rd First National Plaza Chicago, IL 60602	William Sholten 312-732-4600 william.sholten@jpmorgan.com	GMAC Mortgage, LLC	Custodial
1710	777167503	JPMORGAN CHASE BANK, N.A.	3rd First National Plaza Chicago, IL 60602	William Sholten 312-732-4600 william.sholten@jpmorgan.com	GMAC Mortgage, LLC	Custodial
1711	777167511	JPMORGAN CHASE BANK, N.A.	3rd First National Plaza Chicago, IL 60602	William Sholten 312-732-4600 william.sholten@jpmorgan.com	GMAC Mortgage, LLC	Custodial
1712	777167529	JPMORGAN CHASE BANK, N.A.	3rd First National Plaza Chicago, IL 60602	William Sholten 312-732-4600 william.sholten@jpmorgan.com	GMAC Mortgage, LLC	Custodial
1713	777167537	JPMORGAN CHASE BANK, N.A.	3rd First National Plaza Chicago, IL 60602	William Sholten 312-732-4600 william.sholten@jpmorgan.com	GMAC Mortgage, LLC	Custodial
1714	777167545	JPMORGAN CHASE BANK, N.A.	3rd First National Plaza Chicago, IL 60602	William Sholten 312-732-4600 william.sholten@jpmorgan.com	GMAC Mortgage, LLC	Custodial
1715	777167552	JPMORGAN CHASE BANK, N.A.	3rd First National Plaza Chicago, IL 60602	William Sholten 312-732-4600 william.sholten@jpmorgan.com	GMAC Mortgage, LLC	Custodial
1716	777167560	JPMORGAN CHASE BANK, N.A.	3rd First National Plaza Chicago, IL 60602	William Sholten 312-732-4600 william.sholten@jpmorgan.com	GMAC Mortgage, LLC	Custodial
1717	777167578	JPMORGAN CHASE BANK, N.A.	3rd First National Plaza Chicago, IL 60602	William Sholten 312-732-4600 william.sholten@jpmorgan.com	GMAC Mortgage, LLC	Custodial
1718	777167586	JPMORGAN CHASE BANK, N.A.	3rd First National Plaza Chicago, IL 60602	William Sholten 312-732-4600 william.sholten@jpmorgan.com	GMAC Mortgage, LLC	Custodial
1719	777167594	JPMORGAN CHASE BANK, N.A.	3rd First National Plaza Chicago, IL 60602	William Sholten 312-732-4600 william.sholten@jpmorgan.com	GMAC Mortgage, LLC	Custodial
1720	777167602	JPMORGAN CHASE BANK, N.A.	3rd First National Plaza Chicago, IL 60602	William Sholten 312-732-4600 william.sholten@jpmorgan.com	GMAC Mortgage, LLC	Custodial

Privileged and Confidential

Exhibit B - Bank Accounts

Ref #	Account Number	Bank	Address	Contact	Corporate/Company Code	Account Type
1721	777167610	JPMORGAN CHASE BANK, N.A.	3rd First National Plaza Chicago, IL 60602	William Sholten 312-732-4600 william.sholten@jpmorgan.com	GMAC Mortgage, LLC	Custodial
1722	777167628	JPMORGAN CHASE BANK, N.A.	3rd First National Plaza Chicago, IL 60602	William Sholten 312-732-4600 william.sholten@jpmorgan.com	GMAC Mortgage, LLC	Custodial
1723	777167636	JPMORGAN CHASE BANK, N.A.	3rd First National Plaza Chicago, IL 60602	William Sholten 312-732-4600 william.sholten@jpmorgan.com	GMAC Mortgage, LLC	Custodial
1724	777167644	JPMORGAN CHASE BANK, N.A.	3rd First National Plaza Chicago, IL 60602	William Sholten 312-732-4600 william.sholten@jpmorgan.com	GMAC Mortgage, LLC	Custodial
1725	777167651	JPMORGAN CHASE BANK, N.A.	3rd First National Plaza Chicago, IL 60602	William Sholten 312-732-4600 william.sholten@jpmorgan.com	GMAC Mortgage, LLC	Custodial
1726	777167669	JPMORGAN CHASE BANK, N.A.	3rd First National Plaza Chicago, IL 60602	William Sholten 312-732-4600 william.sholten@jpmorgan.com	GMAC Mortgage, LLC	Custodial
1727	777167677	JPMORGAN CHASE BANK, N.A.	3rd First National Plaza Chicago, IL 60602	William Sholten 312-732-4600 william.sholten@jpmorgan.com	GMAC Mortgage, LLC	Custodial
1728	777167685	JPMORGAN CHASE BANK, N.A.	3rd First National Plaza Chicago, IL 60602	William Sholten 312-732-4600 william.sholten@jpmorgan.com	GMAC Mortgage, LLC	Custodial
1729	777167693	JPMORGAN CHASE BANK, N.A.	3rd First National Plaza Chicago, IL 60602	William Sholten 312-732-4600 william.sholten@jpmorgan.com	GMAC Mortgage, LLC	Custodial
1730	777167701	JPMORGAN CHASE BANK, N.A.	3rd First National Plaza Chicago, IL 60602	William Sholten 312-732-4600 william.sholten@jpmorgan.com	GMAC Mortgage, LLC	Custodial
1731	777167719	JPMORGAN CHASE BANK, N.A.	3rd First National Plaza Chicago, IL 60602	William Sholten 312-732-4600 william.sholten@jpmorgan.com	GMAC Mortgage, LLC	Custodial
1732	777167727	JPMORGAN CHASE BANK, N.A.	3rd First National Plaza Chicago, IL 60602	William Sholten 312-732-4600 william.sholten@jpmorgan.com	GMAC Mortgage, LLC	Custodial
1733	777167735	JPMORGAN CHASE BANK, N.A.	3rd First National Plaza Chicago, IL 60602	William Sholten 312-732-4600 william.sholten@jpmorgan.com	GMAC Mortgage, LLC	Custodial
1734	777167784	JPMORGAN CHASE BANK, N.A.	3rd First National Plaza Chicago, IL 60602	William Sholten 312-732-4600 william.sholten@jpmorgan.com	GMAC Mortgage, LLC	Custodial
1735	777167792	JPMORGAN CHASE BANK, N.A.	3rd First National Plaza Chicago, IL 60602	William Sholten 312-732-4600 william.sholten@jpmorgan.com	GMAC Mortgage, LLC	Custodial
1736	777167826	JPMORGAN CHASE BANK, N.A.	3rd First National Plaza Chicago, IL 60602	William Sholten 312-732-4600 william.sholten@jpmorgan.com	GMAC Mortgage, LLC	Custodial
1737	777167834	JPMORGAN CHASE BANK, N.A.	3rd First National Plaza Chicago, IL 60602	William Sholten 312-732-4600 william.sholten@jpmorgan.com	GMAC Mortgage, LLC	Custodial
1738	777167875	JPMORGAN CHASE BANK, N.A.	3rd First National Plaza Chicago, IL 60602	William Sholten 312-732-4600 william.sholten@jpmorgan.com	GMAC Mortgage, LLC	Custodial
1739	777167909	JPMORGAN CHASE BANK, N.A.	3rd First National Plaza Chicago, IL 60602	William Sholten 312-732-4600 william.sholten@jpmorgan.com	GMAC Mortgage, LLC	Custodial
1740	777167917	JPMORGAN CHASE BANK, N.A.	3rd First National Plaza Chicago, IL 60602	William Sholten 312-732-4600 william.sholten@jpmorgan.com	GMAC Mortgage, LLC	Custodial
1741	777167933	JPMORGAN CHASE BANK, N.A.	3rd First National Plaza Chicago, IL 60602	William Sholten 312-732-4600 william.sholten@jpmorgan.com	GMAC Mortgage, LLC	Custodial
1742	777167982	JPMORGAN CHASE BANK, N.A.	3rd First National Plaza Chicago, IL 60602	William Sholten 312-732-4600 william.sholten@jpmorgan.com	GMAC Mortgage, LLC	Custodial
1743	777171711	JPMORGAN CHASE BANK, N.A.	3rd First National Plaza Chicago, IL 60602	William Sholten 312-732-4600 william.sholten@jpmorgan.com	GMAC Mortgage, LLC	Custodial
1744	777171729	JPMORGAN CHASE BANK, N.A.	3rd First National Plaza Chicago, IL 60602	William Sholten 312-732-4600 william.sholten@jpmorgan.com	GMAC Mortgage, LLC	Custodial
1745	777171737	JPMORGAN CHASE BANK, N.A.	3rd First National Plaza Chicago, IL 60602	William Sholten 312-732-4600 william.sholten@jpmorgan.com	GMAC Mortgage, LLC	Custodial
1746	777171745	JPMORGAN CHASE BANK, N.A.	3rd First National Plaza Chicago, IL 60602	William Sholten 312-732-4600 william.sholten@jpmorgan.com	GMAC Mortgage, LLC	Custodial
1747	777171752	JPMORGAN CHASE BANK, N.A.	3rd First National Plaza Chicago, IL 60602	William Sholten 312-732-4600 william.sholten@jpmorgan.com	GMAC Mortgage, LLC	Custodial
1748	777171760	JPMORGAN CHASE BANK, N.A.	3rd First National Plaza Chicago, IL 60602	William Sholten 312-732-4600 william.sholten@jpmorgan.com	GMAC Mortgage, LLC	Custodial
1749	777171778	JPMORGAN CHASE BANK, N.A.	3rd First National Plaza Chicago, IL 60602	William Sholten 312-732-4600 william.sholten@jpmorgan.com	GMAC Mortgage, LLC	Custodial
1750	777171786	JPMORGAN CHASE BANK, N.A.	3rd First National Plaza Chicago, IL 60602	William Sholten 312-732-4600 william.sholten@jpmorgan.com	GMAC Mortgage, LLC	Custodial
1751	777171794	JPMORGAN CHASE BANK, N.A.	3rd First National Plaza Chicago, IL 60602	William Sholten 312-732-4600 william.sholten@jpmorgan.com	GMAC Mortgage, LLC	Custodial
1752	777171802	JPMORGAN CHASE BANK, N.A.	3rd First National Plaza Chicago, IL 60602	William Sholten 312-732-4600 william.sholten@jpmorgan.com	GMAC Mortgage, LLC	Custodial
1753	777171810	JPMORGAN CHASE BANK, N.A.	3rd First National Plaza Chicago, IL 60602	William Sholten 312-732-4600 william.sholten@jpmorgan.com	GMAC Mortgage, LLC	Custodial
1754	777171828	JPMORGAN CHASE BANK, N.A.	3rd First National Plaza Chicago, IL 60602	William Sholten 312-732-4600 william.sholten@jpmorgan.com	GMAC Mortgage, LLC	Custodial
1755	777171851	JPMORGAN CHASE BANK, N.A.	3rd First National Plaza Chicago, IL 60602	William Sholten 312-732-4600 william.sholten@jpmorgan.com	GMAC Mortgage, LLC	Custodial
1756	777171869	JPMORGAN CHASE BANK, N.A.	3rd First National Plaza Chicago, IL 60602	William Sholten 312-732-4600 william.sholten@jpmorgan.com	GMAC Mortgage, LLC	Custodial
1757	777171877	JPMORGAN CHASE BANK, N.A.	3rd First National Plaza Chicago, IL 60602	William Sholten 312-732-4600 william.sholten@jpmorgan.com	GMAC Mortgage, LLC	Custodial
1758	777171885	JPMORGAN CHASE BANK, N.A.	3rd First National Plaza Chicago, IL 60602	William Sholten 312-732-4600 william.sholten@jpmorgan.com	GMAC Mortgage, LLC	Custodial
1759	777171893	JPMORGAN CHASE BANK, N.A.	3rd First National Plaza Chicago, IL 60602	William Sholten 312-732-4600 william.sholten@jpmorgan.com	GMAC Mortgage, LLC	Custodial
1760	777171901	JPMORGAN CHASE BANK, N.A.	3rd First National Plaza Chicago, IL 60602	William Sholten 312-732-4600 william.sholten@jpmorgan.com	GMAC Mortgage, LLC	Custodial
1761	777171919	JPMORGAN CHASE BANK, N.A.	3rd First National Plaza Chicago, IL 60602	William Sholten 312-732-4600 william.sholten@jpmorgan.com	GMAC Mortgage, LLC	Custodial
1762	777171927	JPMORGAN CHASE BANK, N.A.	3rd First National Plaza Chicago, IL 60602	William Sholten 312-732-4600 william.sholten@jpmorgan.com	GMAC Mortgage, LLC	Custodial
1763	777171935	JPMORGAN CHASE BANK, N.A.	3rd First National Plaza Chicago, IL 60602	William Sholten 312-732-4600 william.sholten@jpmorgan.com	GMAC Mortgage, LLC	Custodial

Privileged and Confidential

Exhibit B - Bank Accounts

Ref #	Account Number	Bank	Address	Contact	Corporate/Company Code	Account Type
1764	777171943	JPMORGAN CHASE BANK, N.A.	3rd First National Plaza Chicago, IL 60602	William Sholten 312-732-4600 william.sholten@jpmorgan.com	GMAC Mortgage, LLC	Custodial
1765	777171976	JPMORGAN CHASE BANK, N.A.	3rd First National Plaza Chicago, IL 60602	William Sholten 312-732-4600 william.sholten@jpmorgan.com	GMAC Mortgage, LLC	Custodial
1766	777171984	JPMORGAN CHASE BANK, N.A.	3rd First National Plaza Chicago, IL 60602	William Sholten 312-732-4600 william.sholten@jpmorgan.com	GMAC Mortgage, LLC	Custodial
1767	777171992	JPMORGAN CHASE BANK, N.A.	3rd First National Plaza Chicago, IL 60602	William Sholten 312-732-4600 william.sholten@jpmorgan.com	GMAC Mortgage, LLC	Custodial
1768	777172008	JPMORGAN CHASE BANK, N.A.	3rd First National Plaza Chicago, IL 60602	William Sholten 312-732-4600 william.sholten@jpmorgan.com	GMAC Mortgage, LLC	Custodial
1769	777172016	JPMORGAN CHASE BANK, N.A.	3rd First National Plaza Chicago, IL 60602	William Sholten 312-732-4600 william.sholten@jpmorgan.com	GMAC Mortgage, LLC	Custodial
1770	777172024	JPMORGAN CHASE BANK, N.A.	3rd First National Plaza Chicago, IL 60602	William Sholten 312-732-4600 william.sholten@jpmorgan.com	GMAC Mortgage, LLC	Custodial
1771	777172032	JPMORGAN CHASE BANK, N.A.	3rd First National Plaza Chicago, IL 60602	William Sholten 312-732-4600 william.sholten@jpmorgan.com	GMAC Mortgage, LLC	Custodial
1772	777172040	JPMORGAN CHASE BANK, N.A.	3rd First National Plaza Chicago, IL 60602	William Sholten 312-732-4600 william.sholten@jpmorgan.com	GMAC Mortgage, LLC	Custodial
1773	777172057	JPMORGAN CHASE BANK, N.A.	3rd First National Plaza Chicago, IL 60602	William Sholten 312-732-4600 william.sholten@jpmorgan.com	GMAC Mortgage, LLC	Custodial
1774	777172065	JPMORGAN CHASE BANK, N.A.	3rd First National Plaza Chicago, IL 60602	William Sholten 312-732-4600 william.sholten@jpmorgan.com	GMAC Mortgage, LLC	Custodial
1775	777172073	JPMORGAN CHASE BANK, N.A.	3rd First National Plaza Chicago, IL 60602	William Sholten 312-732-4600 william.sholten@jpmorgan.com	GMAC Mortgage, LLC	Custodial
1776	777172081	JPMORGAN CHASE BANK, N.A.	3rd First National Plaza Chicago, IL 60602	William Sholten 312-732-4600 william.sholten@jpmorgan.com	GMAC Mortgage, LLC	Custodial
1777	777172099	JPMORGAN CHASE BANK, N.A.	3rd First National Plaza Chicago, IL 60602	William Sholten 312-732-4600 william.sholten@jpmorgan.com	GMAC Mortgage, LLC	Custodial
1778	777172107	JPMORGAN CHASE BANK, N.A.	3rd First National Plaza Chicago, IL 60602	William Sholten 312-732-4600 william.sholten@jpmorgan.com	GMAC Mortgage, LLC	Custodial
1779	777172115	JPMORGAN CHASE BANK, N.A.	3rd First National Plaza Chicago, IL 60602	William Sholten 312-732-4600 william.sholten@jpmorgan.com	GMAC Mortgage, LLC	Custodial
1780	777172123	JPMORGAN CHASE BANK, N.A.	3rd First National Plaza Chicago, IL 60602	William Sholten 312-732-4600 william.sholten@jpmorgan.com	GMAC Mortgage, LLC	Custodial
1781	777172156	JPMORGAN CHASE BANK, N.A.	3rd First National Plaza Chicago, IL 60602	William Sholten 312-732-4600 william.sholten@jpmorgan.com	GMAC Mortgage, LLC	Custodial
1782	777172164	JPMORGAN CHASE BANK, N.A.	3rd First National Plaza Chicago, IL 60602	William Sholten 312-732-4600 william.sholten@jpmorgan.com	GMAC Mortgage, LLC	Custodial
1783	777172172	JPMORGAN CHASE BANK, N.A.	3rd First National Plaza Chicago, IL 60602	William Sholten 312-732-4600 william.sholten@jpmorgan.com	GMAC Mortgage, LLC	Custodial
1784	777172180	JPMORGAN CHASE BANK, N.A.	3rd First National Plaza Chicago, IL 60602	William Sholten 312-732-4600 william.sholten@jpmorgan.com	GMAC Mortgage, LLC	Custodial
1785	777172214	JPMORGAN CHASE BANK, N.A.	3rd First National Plaza Chicago, IL 60602	William Sholten 312-732-4600 william.sholten@jpmorgan.com	GMAC Mortgage, LLC	Custodial
1786	777172222	JPMORGAN CHASE BANK, N.A.	3rd First National Plaza Chicago, IL 60602	William Sholten 312-732-4600 william.sholten@jpmorgan.com	GMAC Mortgage, LLC	Custodial
1787	777172230	JPMORGAN CHASE BANK, N.A.	3rd First National Plaza Chicago, IL 60602	William Sholten 312-732-4600 william.sholten@jpmorgan.com	GMAC Mortgage, LLC	Custodial
1788	777172248	JPMORGAN CHASE BANK, N.A.	3rd First National Plaza Chicago, IL 60602	William Sholten 312-732-4600 william.sholten@jpmorgan.com	GMAC Mortgage, LLC	Custodial
1789	777172255	JPMORGAN CHASE BANK, N.A.	3rd First National Plaza Chicago, IL 60602	William Sholten 312-732-4600 william.sholten@jpmorgan.com	GMAC Mortgage, LLC	Custodial
1790	777172263	JPMORGAN CHASE BANK, N.A.	3rd First National Plaza Chicago, IL 60602	William Sholten 312-732-4600 william.sholten@jpmorgan.com	GMAC Mortgage, LLC	Custodial
1791	777172271	JPMORGAN CHASE BANK, N.A.	3rd First National Plaza Chicago, IL 60602	William Sholten 312-732-4600 william.sholten@jpmorgan.com	GMAC Mortgage, LLC	Custodial
1792	777172289	JPMORGAN CHASE BANK, N.A.	3rd First National Plaza Chicago, IL 60602	William Sholten 312-732-4600 william.sholten@jpmorgan.com	GMAC Mortgage, LLC	Custodial
1793	777172297	JPMORGAN CHASE BANK, N.A.	3rd First National Plaza Chicago, IL 60602	William Sholten 312-732-4600 william.sholten@jpmorgan.com	GMAC Mortgage, LLC	Custodial
1794	777172305	JPMORGAN CHASE BANK, N.A.	3rd First National Plaza Chicago, IL 60602	William Sholten 312-732-4600 william.sholten@jpmorgan.com	GMAC Mortgage, LLC	Custodial
1795	777172313	JPMORGAN CHASE BANK, N.A.	3rd First National Plaza Chicago, IL 60602	William Sholten 312-732-4600 william.sholten@jpmorgan.com	GMAC Mortgage, LLC	Custodial
1796	777172321	JPMORGAN CHASE BANK, N.A.	3rd First National Plaza Chicago, IL 60602	William Sholten 312-732-4600 william.sholten@jpmorgan.com	GMAC Mortgage, LLC	Custodial
1797	777172339	JPMORGAN CHASE BANK, N.A.	3rd First National Plaza Chicago, IL 60602	William Sholten 312-732-4600 william.sholten@jpmorgan.com	GMAC Mortgage, LLC	Custodial
1798	777172347	JPMORGAN CHASE BANK, N.A.	3rd First National Plaza Chicago, IL 60602	William Sholten 312-732-4600 william.sholten@jpmorgan.com	GMAC Mortgage, LLC	Custodial
1799	777172354	JPMORGAN CHASE BANK, N.A.	3rd First National Plaza Chicago, IL 60602	William Sholten 312-732-4600 william.sholten@jpmorgan.com	GMAC Mortgage, LLC	Custodial
1800	777172362	JPMORGAN CHASE BANK, N.A.	3rd First National Plaza Chicago, IL 60602	William Sholten 312-732-4600 william.sholten@jpmorgan.com	GMAC Mortgage, LLC	Custodial
1801	777172370	JPMORGAN CHASE BANK, N.A.	3rd First National Plaza Chicago, IL 60602	William Sholten 312-732-4600 william.sholten@jpmorgan.com	GMAC Mortgage, LLC	Custodial
1802	777172388	JPMORGAN CHASE BANK, N.A.	3rd First National Plaza Chicago, IL 60602	William Sholten 312-732-4600 william.sholten@jpmorgan.com	GMAC Mortgage, LLC	Custodial
1803	777172396	JPMORGAN CHASE BANK, N.A.	3rd First National Plaza Chicago, IL 60602	William Sholten 312-732-4600 william.sholten@jpmorgan.com	GMAC Mortgage, LLC	Custodial
1804	777172404	JPMORGAN CHASE BANK, N.A.	3rd First National Plaza Chicago, IL 60602	William Sholten 312-732-4600 william.sholten@jpmorgan.com	GMAC Mortgage, LLC	Custodial
1805	777172412	JPMORGAN CHASE BANK, N.A.	3rd First National Plaza Chicago, IL 60602	William Sholten 312-732-4600 william.sholten@jpmorgan.com	GMAC Mortgage, LLC	Custodial
1806	777172420	JPMORGAN CHASE BANK, N.A.	3rd First National Plaza Chicago, IL 60602	William Sholten 312-732-4600 william.sholten@jpmorgan.com	GMAC Mortgage, LLC	Custodial

Privileged and Confidential

Exhibit B - Bank Accounts

Ref #	Account Number	Bank	Address	Contact	Corporate/Company Code	Account Type
1807	777172438	JPMORGAN CHASE BANK, N.A.	3rd First National Plaza Chicago, IL 60602	William Sholten 312-732-4600 william.sholten@jpmorgan.com	GMAC Mortgage, LLC	Custodial
1808	777172446	JPMORGAN CHASE BANK, N.A.	3rd First National Plaza Chicago, IL 60602	William Sholten 312-732-4600 william.sholten@jpmorgan.com	GMAC Mortgage, LLC	Custodial
1809	777172453	JPMORGAN CHASE BANK, N.A.	3rd First National Plaza Chicago, IL 60602	William Sholten 312-732-4600 william.sholten@jpmorgan.com	GMAC Mortgage, LLC	Custodial
1810	777172461	JPMORGAN CHASE BANK, N.A.	3rd First National Plaza Chicago, IL 60602	William Sholten 312-732-4600 william.sholten@jpmorgan.com	GMAC Mortgage, LLC	Custodial
1811	777172479	JPMORGAN CHASE BANK, N.A.	3rd First National Plaza Chicago, IL 60602	William Sholten 312-732-4600 william.sholten@jpmorgan.com	GMAC Mortgage, LLC	Custodial
1812	777172495	JPMORGAN CHASE BANK, N.A.	3rd First National Plaza Chicago, IL 60602	William Sholten 312-732-4600 william.sholten@jpmorgan.com	GMAC Mortgage, LLC	Custodial
1813	777172503	JPMORGAN CHASE BANK, N.A.	3rd First National Plaza Chicago, IL 60602	William Sholten 312-732-4600 william.sholten@jpmorgan.com	GMAC Mortgage, LLC	Custodial
1814	777172511	JPMORGAN CHASE BANK, N.A.	3rd First National Plaza Chicago, IL 60602	William Sholten 312-732-4600 william.sholten@jpmorgan.com	GMAC Mortgage, LLC	Custodial
1815	777172529	JPMORGAN CHASE BANK, N.A.	3rd First National Plaza Chicago, IL 60602	William Sholten 312-732-4600 william.sholten@jpmorgan.com	GMAC Mortgage, LLC	Custodial
1816	777172537	JPMORGAN CHASE BANK, N.A.	3rd First National Plaza Chicago, IL 60602	William Sholten 312-732-4600 william.sholten@jpmorgan.com	GMAC Mortgage, LLC	Custodial
1817	777172545	JPMORGAN CHASE BANK, N.A.	3rd First National Plaza Chicago, IL 60602	William Sholten 312-732-4600 william.sholten@jpmorgan.com	GMAC Mortgage, LLC	Custodial
1818	777172552	JPMORGAN CHASE BANK, N.A.	3rd First National Plaza Chicago, IL 60602	William Sholten 312-732-4600 william.sholten@jpmorgan.com	GMAC Mortgage, LLC	Custodial
1819	777172560	JPMORGAN CHASE BANK, N.A.	3rd First National Plaza Chicago, IL 60602	William Sholten 312-732-4600 william.sholten@jpmorgan.com	GMAC Mortgage, LLC	Custodial
1820	777172578	JPMORGAN CHASE BANK, N.A.	3rd First National Plaza Chicago, IL 60602	William Sholten 312-732-4600 william.sholten@jpmorgan.com	GMAC Mortgage, LLC	Custodial
1821	777172586	JPMORGAN CHASE BANK, N.A.	3rd First National Plaza Chicago, IL 60602	William Sholten 312-732-4600 william.sholten@jpmorgan.com	GMAC Mortgage, LLC	Custodial
1822	777172594	JPMORGAN CHASE BANK, N.A.	3rd First National Plaza Chicago, IL 60602	William Sholten 312-732-4600 william.sholten@jpmorgan.com	GMAC Mortgage, LLC	Custodial
1823	777172602	JPMORGAN CHASE BANK, N.A.	3rd First National Plaza Chicago, IL 60602	William Sholten 312-732-4600 william.sholten@jpmorgan.com	GMAC Mortgage, LLC	Custodial
1824	777172610	JPMORGAN CHASE BANK, N.A.	3rd First National Plaza Chicago, IL 60602	William Sholten 312-732-4600 william.sholten@jpmorgan.com	GMAC Mortgage, LLC	Custodial
1825	777172628	JPMORGAN CHASE BANK, N.A.	3rd First National Plaza Chicago, IL 60602	William Sholten 312-732-4600 william.sholten@jpmorgan.com	GMAC Mortgage, LLC	Custodial
1826	777172636	JPMORGAN CHASE BANK, N.A.	3rd First National Plaza Chicago, IL 60602	William Sholten 312-732-4600 william.sholten@jpmorgan.com	GMAC Mortgage, LLC	Custodial
1827	777172644	JPMORGAN CHASE BANK, N.A.	3rd First National Plaza Chicago, IL 60602	William Sholten 312-732-4600 william.sholten@jpmorgan.com	GMAC Mortgage, LLC	Custodial
1828	777172677	JPMORGAN CHASE BANK, N.A.	3rd First National Plaza Chicago, IL 60602	William Sholten 312-732-4600 william.sholten@jpmorgan.com	GMAC Mortgage, LLC	Custodial
1829	777172685	JPMORGAN CHASE BANK, N.A.	3rd First National Plaza Chicago, IL 60602	William Sholten 312-732-4600 william.sholten@jpmorgan.com	GMAC Mortgage, LLC	Custodial
1830	777172727	JPMORGAN CHASE BANK, N.A.	3rd First National Plaza Chicago, IL 60602	William Sholten 312-732-4600 william.sholten@jpmorgan.com	GMAC Mortgage, LLC	Custodial
1831	777173022	JPMORGAN CHASE BANK, N.A.	3rd First National Plaza Chicago, IL 60602	William Sholten 312-732-4600 william.sholten@jpmorgan.com	GMAC Mortgage, LLC	Custodial
1832	777173030	JPMORGAN CHASE BANK, N.A.	3rd First National Plaza Chicago, IL 60602	William Sholten 312-732-4600 william.sholten@jpmorgan.com	GMAC Mortgage, LLC	Custodial
1833	777173071	JPMORGAN CHASE BANK, N.A.	3rd First National Plaza Chicago, IL 60602	William Sholten 312-732-4600 william.sholten@jpmorgan.com	GMAC Mortgage, LLC	Custodial
1834	777173246	JPMORGAN CHASE BANK, N.A.	3rd First National Plaza Chicago, IL 60602	William Sholten 312-732-4600 william.sholten@jpmorgan.com	GMAC Mortgage, LLC	Custodial
1835	777173253	JPMORGAN CHASE BANK, N.A.	3rd First National Plaza Chicago, IL 60602	William Sholten 312-732-4600 william.sholten@jpmorgan.com	GMAC Mortgage, LLC	Custodial
1836	777173261	JPMORGAN CHASE BANK, N.A.	3rd First National Plaza Chicago, IL 60602	William Sholten 312-732-4600 william.sholten@jpmorgan.com	GMAC Mortgage, LLC	Custodial
1837	777173279	JPMORGAN CHASE BANK, N.A.	3rd First National Plaza Chicago, IL 60602	William Sholten 312-732-4600 william.sholten@jpmorgan.com	GMAC Mortgage, LLC	Custodial
1838	777173287	JPMORGAN CHASE BANK, N.A.	3rd First National Plaza Chicago, IL 60602	William Sholten 312-732-4600 william.sholten@jpmorgan.com	GMAC Mortgage, LLC	Custodial
1839	777173295	JPMORGAN CHASE BANK, N.A.	3rd First National Plaza Chicago, IL 60602	William Sholten 312-732-4600 william.sholten@jpmorgan.com	GMAC Mortgage, LLC	Custodial
1840	777173303	JPMORGAN CHASE BANK, N.A.	3rd First National Plaza Chicago, IL 60602	William Sholten 312-732-4600 william.sholten@jpmorgan.com	GMAC Mortgage, LLC	Custodial
1841	777173311	JPMORGAN CHASE BANK, N.A.	3rd First National Plaza Chicago, IL 60602	William Sholten 312-732-4600 william.sholten@jpmorgan.com	GMAC Mortgage, LLC	Custodial
1842	777173329	JPMORGAN CHASE BANK, N.A.	3rd First National Plaza Chicago, IL 60602	William Sholten 312-732-4600 william.sholten@jpmorgan.com	GMAC Mortgage, LLC	Custodial
1843	777173337	JPMORGAN CHASE BANK, N.A.	3rd First National Plaza Chicago, IL 60602	William Sholten 312-732-4600 william.sholten@jpmorgan.com	GMAC Mortgage, LLC	Custodial
1844	777173360	JPMORGAN CHASE BANK, N.A.	3rd First National Plaza Chicago, IL 60602	William Sholten 312-732-4600 william.sholten@jpmorgan.com	GMAC Mortgage, LLC	Custodial
1845	777173378	JPMORGAN CHASE BANK, N.A.	3rd First National Plaza Chicago, IL 60602	William Sholten 312-732-4600 william.sholten@jpmorgan.com	GMAC Mortgage, LLC	Custodial
1846	777173386	JPMORGAN CHASE BANK, N.A.	3rd First National Plaza Chicago, IL 60602	William Sholten 312-732-4600 william.sholten@jpmorgan.com	GMAC Mortgage, LLC	Custodial
1847	777173394	JPMORGAN CHASE BANK, N.A.	3rd First National Plaza Chicago, IL 60602	William Sholten 312-732-4600 william.sholten@jpmorgan.com	GMAC Mortgage, LLC	Custodial
1848	777173402	JPMORGAN CHASE BANK, N.A.	3rd First National Plaza Chicago, IL 60602	William Sholten 312-732-4600 william.sholten@jpmorgan.com	GMAC Mortgage, LLC	Custodial
1849	777173410	JPMORGAN CHASE BANK, N.A.	3rd First National Plaza Chicago, IL 60602	William Sholten 312-732-4600 william.sholten@jpmorgan.com	GMAC Mortgage, LLC	Custodial

Privileged and Confidential

Exhibit B - Bank Accounts

Ref #	Account Number	Bank	Address	Contact	Corporate/Company Code	Account Type
1850	777173428	JPMORGAN CHASE BANK, N.A.	3rd First National Plaza Chicago, IL 60602	William Sholten 312-732-4600 william.sholten@jpmorgan.com	GMAC Mortgage, LLC	Custodial
1851	777173436	JPMORGAN CHASE BANK, N.A.	3rd First National Plaza Chicago, IL 60602	William Sholten 312-732-4600 william.sholten@jpmorgan.com	GMAC Mortgage, LLC	Custodial
1852	777173444	JPMORGAN CHASE BANK, N.A.	3rd First National Plaza Chicago, IL 60602	William Sholten 312-732-4600 william.sholten@jpmorgan.com	GMAC Mortgage, LLC	Custodial
1853	777173451	JPMORGAN CHASE BANK, N.A.	3rd First National Plaza Chicago, IL 60602	William Sholten 312-732-4600 william.sholten@jpmorgan.com	GMAC Mortgage, LLC	Custodial
1854	777173469	JPMORGAN CHASE BANK, N.A.	3rd First National Plaza Chicago, IL 60602	William Sholten 312-732-4600 william.sholten@jpmorgan.com	GMAC Mortgage, LLC	Custodial
1855	777173477	JPMORGAN CHASE BANK, N.A.	3rd First National Plaza Chicago, IL 60602	William Sholten 312-732-4600 william.sholten@jpmorgan.com	GMAC Mortgage, LLC	Custodial
1856	777173485	JPMORGAN CHASE BANK, N.A.	3rd First National Plaza Chicago, IL 60602	William Sholten 312-732-4600 william.sholten@jpmorgan.com	GMAC Mortgage, LLC	Custodial
1857	777173493	JPMORGAN CHASE BANK, N.A.	3rd First National Plaza Chicago, IL 60602	William Sholten 312-732-4600 william.sholten@jpmorgan.com	GMAC Mortgage, LLC	Custodial
1858	777173501	JPMORGAN CHASE BANK, N.A.	3rd First National Plaza Chicago, IL 60602	William Sholten 312-732-4600 william.sholten@jpmorgan.com	GMAC Mortgage, LLC	Custodial
1859	777174541	JPMORGAN CHASE BANK, N.A.	3rd First National Plaza Chicago, IL 60602	William Sholten 312-732-4600 william.sholten@jpmorgan.com	GMAC Mortgage, LLC	Custodial
1860	777174558	JPMORGAN CHASE BANK, N.A.	3rd First National Plaza Chicago, IL 60602	William Sholten 312-732-4600 william.sholten@jpmorgan.com	GMAC Mortgage, LLC	Custodial
1861	777174566	JPMORGAN CHASE BANK, N.A.	3rd First National Plaza Chicago, IL 60602	William Sholten 312-732-4600 william.sholten@jpmorgan.com	GMAC Mortgage, LLC	Custodial
1862	777174574	JPMORGAN CHASE BANK, N.A.	3rd First National Plaza Chicago, IL 60602	William Sholten 312-732-4600 william.sholten@jpmorgan.com	GMAC Mortgage, LLC	Custodial
1863	777174582	JPMORGAN CHASE BANK, N.A.	3rd First National Plaza Chicago, IL 60602	William Sholten 312-732-4600 william.sholten@jpmorgan.com	GMAC Mortgage, LLC	Custodial
1864	777174590	JPMORGAN CHASE BANK, N.A.	3rd First National Plaza Chicago, IL 60602	William Sholten 312-732-4600 william.sholten@jpmorgan.com	GMAC Mortgage, LLC	Custodial
1865	777174608	JPMORGAN CHASE BANK, N.A.	3rd First National Plaza Chicago, IL 60602	William Sholten 312-732-4600 william.sholten@jpmorgan.com	GMAC Mortgage, LLC	Custodial
1866	777174616	JPMORGAN CHASE BANK, N.A.	3rd First National Plaza Chicago, IL 60602	William Sholten 312-732-4600 william.sholten@jpmorgan.com	GMAC Mortgage, LLC	Custodial
1867	777174624	JPMORGAN CHASE BANK, N.A.	3rd First National Plaza Chicago, IL 60602	William Sholten 312-732-4600 william.sholten@jpmorgan.com	GMAC Mortgage, LLC	Custodial
1868	777174632	JPMORGAN CHASE BANK, N.A.	3rd First National Plaza Chicago, IL 60602	William Sholten 312-732-4600 william.sholten@jpmorgan.com	GMAC Mortgage, LLC	Custodial
1869	777174640	JPMORGAN CHASE BANK, N.A.	3rd First National Plaza Chicago, IL 60602	William Sholten 312-732-4600 william.sholten@jpmorgan.com	GMAC Mortgage, LLC	Custodial
1870	777174657	JPMORGAN CHASE BANK, N.A.	3rd First National Plaza Chicago, IL 60602	William Sholten 312-732-4600 william.sholten@jpmorgan.com	GMAC Mortgage, LLC	Custodial
1871	777174665	JPMORGAN CHASE BANK, N.A.	3rd First National Plaza Chicago, IL 60602	William Sholten 312-732-4600 william.sholten@jpmorgan.com	GMAC Mortgage, LLC	Custodial
1872	777174673	JPMORGAN CHASE BANK, N.A.	3rd First National Plaza Chicago, IL 60602	William Sholten 312-732-4600 william.sholten@jpmorgan.com	GMAC Mortgage, LLC	Custodial
1873	777174681	JPMORGAN CHASE BANK, N.A.	3rd First National Plaza Chicago, IL 60602	William Sholten 312-732-4600 william.sholten@jpmorgan.com	GMAC Mortgage, LLC	Custodial
1874	777174699	JPMORGAN CHASE BANK, N.A.	3rd First National Plaza Chicago, IL 60602	William Sholten 312-732-4600 william.sholten@jpmorgan.com	GMAC Mortgage, LLC	Custodial
1875	777174707	JPMORGAN CHASE BANK, N.A.	3rd First National Plaza Chicago, IL 60602	William Sholten 312-732-4600 william.sholten@jpmorgan.com	GMAC Mortgage, LLC	Custodial
1876	777174715	JPMORGAN CHASE BANK, N.A.	3rd First National Plaza Chicago, IL 60602	William Sholten 312-732-4600 william.sholten@jpmorgan.com	GMAC Mortgage, LLC	Custodial
1877	777174723	JPMORGAN CHASE BANK, N.A.	3rd First National Plaza Chicago, IL 60602	William Sholten 312-732-4600 william.sholten@jpmorgan.com	GMAC Mortgage, LLC	Custodial
1878	777174731	JPMORGAN CHASE BANK, N.A.	3rd First National Plaza Chicago, IL 60602	William Sholten 312-732-4600 william.sholten@jpmorgan.com	GMAC Mortgage, LLC	Custodial
1879	777174749	JPMORGAN CHASE BANK, N.A.	3rd First National Plaza Chicago, IL 60602	William Sholten 312-732-4600 william.sholten@jpmorgan.com	GMAC Mortgage, LLC	Custodial
1880	777174756	JPMORGAN CHASE BANK, N.A.	3rd First National Plaza Chicago, IL 60602	William Sholten 312-732-4600 william.sholten@jpmorgan.com	GMAC Mortgage, LLC	Custodial
1881	777174764	JPMORGAN CHASE BANK, N.A.	3rd First National Plaza Chicago, IL 60602	William Sholten 312-732-4600 william.sholten@jpmorgan.com	GMAC Mortgage, LLC	Custodial
1882	777174772	JPMORGAN CHASE BANK, N.A.	3rd First National Plaza Chicago, IL 60602	William Sholten 312-732-4600 william.sholten@jpmorgan.com	GMAC Mortgage, LLC	Custodial
1883	777174780	JPMORGAN CHASE BANK, N.A.	3rd First National Plaza Chicago, IL 60602	William Sholten 312-732-4600 william.sholten@jpmorgan.com	GMAC Mortgage, LLC	Custodial
1884	777174798	JPMORGAN CHASE BANK, N.A.	3rd First National Plaza Chicago, IL 60602	William Sholten 312-732-4600 william.sholten@jpmorgan.com	GMAC Mortgage, LLC	Custodial
1885	777174806	JPMORGAN CHASE BANK, N.A.	3rd First National Plaza Chicago, IL 60602	William Sholten 312-732-4600 william.sholten@jpmorgan.com	GMAC Mortgage, LLC	Custodial
1886	777174814	JPMORGAN CHASE BANK, N.A.	3rd First National Plaza Chicago, IL 60602	William Sholten 312-732-4600 william.sholten@jpmorgan.com	GMAC Mortgage, LLC	Custodial
1887	777174822	JPMORGAN CHASE BANK, N.A.	3rd First National Plaza Chicago, IL 60602	William Sholten 312-732-4600 william.sholten@jpmorgan.com	GMAC Mortgage, LLC	Custodial
1888	777174855	JPMORGAN CHASE BANK, N.A.	3rd First National Plaza Chicago, IL 60602	William Sholten 312-732-4600 william.sholten@jpmorgan.com	GMAC Mortgage, LLC	Custodial
1889	777174863	JPMORGAN CHASE BANK, N.A.	3rd First National Plaza Chicago, IL 60602	William Sholten 312-732-4600 william.sholten@jpmorgan.com	GMAC Mortgage, LLC	Custodial
1890	777174871	JPMORGAN CHASE BANK, N.A.	3rd First National Plaza Chicago, IL 60602	William Sholten 312-732-4600 william.sholten@jpmorgan.com	GMAC Mortgage, LLC	Custodial
1891	777174889	JPMORGAN CHASE BANK, N.A.	3rd First National Plaza Chicago, IL 60602	William Sholten 312-732-4600 william.sholten@jpmorgan.com	GMAC Mortgage, LLC	Custodial
1892	777174897	JPMORGAN CHASE BANK, N.A.	3rd First National Plaza Chicago, IL 60602	William Sholten 312-732-4600 william.sholten@jpmorgan.com	GMAC Mortgage, LLC	Custodial

Privileged and Confidential

Exhibit B - Bank Accounts

Ref #	Account Number	Bank	Address	Contact	Corporate/Company Code	Account Type
1893	777174905	JPMORGAN CHASE BANK, N.A.	3rd First National Plaza Chicago, IL 60602	William Sholten 312-732-4600 william.sholten@jpmorgan.com	GMAC Mortgage, LLC	Custodial
1894	777174913	JPMORGAN CHASE BANK, N.A.	3rd First National Plaza Chicago, IL 60602	William Sholten 312-732-4600 william.sholten@jpmorgan.com	GMAC Mortgage, LLC	Custodial
1895	777174921	JPMORGAN CHASE BANK, N.A.	3rd First National Plaza Chicago, IL 60602	William Sholten 312-732-4600 william.sholten@jpmorgan.com	GMAC Mortgage, LLC	Custodial
1896	777174939	JPMORGAN CHASE BANK, N.A.	3rd First National Plaza Chicago, IL 60602	William Sholten 312-732-4600 william.sholten@jpmorgan.com	GMAC Mortgage, LLC	Custodial
1897	777174947	JPMORGAN CHASE BANK, N.A.	3rd First National Plaza Chicago, IL 60602	William Sholten 312-732-4600 william.sholten@jpmorgan.com	GMAC Mortgage, LLC	Custodial
1898	777174954	JPMORGAN CHASE BANK, N.A.	3rd First National Plaza Chicago, IL 60602	William Sholten 312-732-4600 william.sholten@jpmorgan.com	GMAC Mortgage, LLC	Custodial
1899	777174962	JPMORGAN CHASE BANK, N.A.	3rd First National Plaza Chicago, IL 60602	William Sholten 312-732-4600 william.sholten@jpmorgan.com	GMAC Mortgage, LLC	Custodial
1900	777174970	JPMORGAN CHASE BANK, N.A.	3rd First National Plaza Chicago, IL 60602	William Sholten 312-732-4600 william.sholten@jpmorgan.com	GMAC Mortgage, LLC	Custodial
1901	777174988	JPMORGAN CHASE BANK, N.A.	3rd First National Plaza Chicago, IL 60602	William Sholten 312-732-4600 william.sholten@jpmorgan.com	GMAC Mortgage, LLC	Custodial
1902	777174996	JPMORGAN CHASE BANK, N.A.	3rd First National Plaza Chicago, IL 60602	William Sholten 312-732-4600 william.sholten@jpmorgan.com	GMAC Mortgage, LLC	Custodial
1903	777175001	JPMORGAN CHASE BANK, N.A.	3rd First National Plaza Chicago, IL 60602	William Sholten 312-732-4600 william.sholten@jpmorgan.com	GMAC Mortgage, LLC	Custodial
1904	777175019	JPMORGAN CHASE BANK, N.A.	3rd First National Plaza Chicago, IL 60602	William Sholten 312-732-4600 william.sholten@jpmorgan.com	GMAC Mortgage, LLC	Custodial
1905	777175027	JPMORGAN CHASE BANK, N.A.	3rd First National Plaza Chicago, IL 60602	William Sholten 312-732-4600 william.sholten@jpmorgan.com	GMAC Mortgage, LLC	Custodial
1906	777175035	JPMORGAN CHASE BANK, N.A.	3rd First National Plaza Chicago, IL 60602	William Sholten 312-732-4600 william.sholten@jpmorgan.com	GMAC Mortgage, LLC	Custodial
1907	777175043	JPMORGAN CHASE BANK, N.A.	3rd First National Plaza Chicago, IL 60602	William Sholten 312-732-4600 william.sholten@jpmorgan.com	GMAC Mortgage, LLC	Custodial
1908	777175050	JPMORGAN CHASE BANK, N.A.	3rd First National Plaza Chicago, IL 60602	William Sholten 312-732-4600 william.sholten@jpmorgan.com	GMAC Mortgage, LLC	Custodial
1909	777175068	JPMORGAN CHASE BANK, N.A.	3rd First National Plaza Chicago, IL 60602	William Sholten 312-732-4600 william.sholten@jpmorgan.com	GMAC Mortgage, LLC	Custodial
1910	777175076	JPMORGAN CHASE BANK, N.A.	3rd First National Plaza Chicago, IL 60602	William Sholten 312-732-4600 william.sholten@jpmorgan.com	GMAC Mortgage, LLC	Custodial
1911	777175084	JPMORGAN CHASE BANK, N.A.	3rd First National Plaza Chicago, IL 60602	William Sholten 312-732-4600 william.sholten@jpmorgan.com	GMAC Mortgage, LLC	Custodial
1912	777175092	JPMORGAN CHASE BANK, N.A.	3rd First National Plaza Chicago, IL 60602	William Sholten 312-732-4600 william.sholten@jpmorgan.com	GMAC Mortgage, LLC	Custodial
1913	777175100	JPMORGAN CHASE BANK, N.A.	3rd First National Plaza Chicago, IL 60602	William Sholten 312-732-4600 william.sholten@jpmorgan.com	GMAC Mortgage, LLC	Custodial
1914	777175134	JPMORGAN CHASE BANK, N.A.	3rd First National Plaza Chicago, IL 60602	William Sholten 312-732-4600 william.sholten@jpmorgan.com	GMAC Mortgage, LLC	Custodial
1915	777175142	JPMORGAN CHASE BANK, N.A.	3rd First National Plaza Chicago, IL 60602	William Sholten 312-732-4600 william.sholten@jpmorgan.com	GMAC Mortgage, LLC	Custodial
1916	777175159	JPMORGAN CHASE BANK, N.A.	3rd First National Plaza Chicago, IL 60602	William Sholten 312-732-4600 william.sholten@jpmorgan.com	GMAC Mortgage, LLC	Custodial
1917	777175167	JPMORGAN CHASE BANK, N.A.	3rd First National Plaza Chicago, IL 60602	William Sholten 312-732-4600 william.sholten@jpmorgan.com	GMAC Mortgage, LLC	Custodial
1918	777175175	JPMORGAN CHASE BANK, N.A.	3rd First National Plaza Chicago, IL 60602	William Sholten 312-732-4600 william.sholten@jpmorgan.com	GMAC Mortgage, LLC	Custodial
1919	777175183	JPMORGAN CHASE BANK, N.A.	3rd First National Plaza Chicago, IL 60602	William Sholten 312-732-4600 william.sholten@jpmorgan.com	GMAC Mortgage, LLC	Custodial
1920	777175191	JPMORGAN CHASE BANK, N.A.	3rd First National Plaza Chicago, IL 60602	William Sholten 312-732-4600 william.sholten@jpmorgan.com	GMAC Mortgage, LLC	Custodial
1921	777175209	JPMORGAN CHASE BANK, N.A.	3rd First National Plaza Chicago, IL 60602	William Sholten 312-732-4600 william.sholten@jpmorgan.com	GMAC Mortgage, LLC	Custodial
1922	777175217	JPMORGAN CHASE BANK, N.A.	3rd First National Plaza Chicago, IL 60602	William Sholten 312-732-4600 william.sholten@jpmorgan.com	GMAC Mortgage, LLC	Custodial
1923	777175225	JPMORGAN CHASE BANK, N.A.	3rd First National Plaza Chicago, IL 60602	William Sholten 312-732-4600 william.sholten@jpmorgan.com	GMAC Mortgage, LLC	Custodial
1924	777175233	JPMORGAN CHASE BANK, N.A.	3rd First National Plaza Chicago, IL 60602	William Sholten 312-732-4600 william.sholten@jpmorgan.com	GMAC Mortgage, LLC	Custodial
1925	777175241	JPMORGAN CHASE BANK, N.A.	3rd First National Plaza Chicago, IL 60602	William Sholten 312-732-4600 william.sholten@jpmorgan.com	GMAC Mortgage, LLC	Custodial
1926	777175258	JPMORGAN CHASE BANK, N.A.	3rd First National Plaza Chicago, IL 60602	William Sholten 312-732-4600 william.sholten@jpmorgan.com	GMAC Mortgage, LLC	Custodial
1927	777175266	JPMORGAN CHASE BANK, N.A.	3rd First National Plaza Chicago, IL 60602	William Sholten 312-732-4600 william.sholten@jpmorgan.com	GMAC Mortgage, LLC	Custodial
1928	777175274	JPMORGAN CHASE BANK, N.A.	3rd First National Plaza Chicago, IL 60602	William Sholten 312-732-4600 william.sholten@jpmorgan.com	GMAC Mortgage, LLC	Custodial
1929	777175282	JPMORGAN CHASE BANK, N.A.	3rd First National Plaza Chicago, IL 60602	William Sholten 312-732-4600 william.sholten@jpmorgan.com	GMAC Mortgage, LLC	Custodial
1930	777175290	JPMORGAN CHASE BANK, N.A.	3rd First National Plaza Chicago, IL 60602	William Sholten 312-732-4600 william.sholten@jpmorgan.com	GMAC Mortgage, LLC	Custodial
1931	777175308	JPMORGAN CHASE BANK, N.A.	3rd First National Plaza Chicago, IL 60602	William Sholten 312-732-4600 william.sholten@jpmorgan.com	GMAC Mortgage, LLC	Custodial
1932	777175316	JPMORGAN CHASE BANK, N.A.	3rd First National Plaza Chicago, IL 60602	William Sholten 312-732-4600 william.sholten@jpmorgan.com	GMAC Mortgage, LLC	Custodial
1933	777175324	JPMORGAN CHASE BANK, N.A.	3rd First National Plaza Chicago, IL 60602	William Sholten 312-732-4600 william.sholten@jpmorgan.com	GMAC Mortgage, LLC	Custodial
1934	777175449	JPMORGAN CHASE BANK, N.A.	3rd First National Plaza Chicago, IL 60602	William Sholten 312-732-4600 william.sholten@jpmorgan.com	GMAC Mortgage, LLC	Custodial
1935	777175480	JPMORGAN CHASE BANK, N.A.	3rd First National Plaza Chicago, IL 60602	William Sholten 312-732-4600 william.sholten@jpmorgan.com	GMAC Mortgage, LLC	Custodial

Privileged and Confidential

Exhibit B - Bank Accounts

Ref #	Account Number	Bank	Address	Contact	Corporate/Company Code	Account Type
1936	777175506	JPMORGAN CHASE BANK, N.A.	3rd First National Plaza Chicago, IL 60602	William Sholten 312-732-4600 william.sholten@jpmorgan.com	GMAC Mortgage, LLC	Custodial
1937	777175514	JPMORGAN CHASE BANK, N.A.	3rd First National Plaza Chicago, IL 60602	William Sholten 312-732-4600 william.sholten@jpmorgan.com	GMAC Mortgage, LLC	Custodial
1938	777175522	JPMORGAN CHASE BANK, N.A.	3rd First National Plaza Chicago, IL 60602	William Sholten 312-732-4600 william.sholten@jpmorgan.com	GMAC Mortgage, LLC	Custodial
1939	777175530	JPMORGAN CHASE BANK, N.A.	3rd First National Plaza Chicago, IL 60602	William Sholten 312-732-4600 william.sholten@jpmorgan.com	GMAC Mortgage, LLC	Custodial
1940	777175548	JPMORGAN CHASE BANK, N.A.	3rd First National Plaza Chicago, IL 60602	William Sholten 312-732-4600 william.sholten@jpmorgan.com	GMAC Mortgage, LLC	Custodial
1941	777175555	JPMORGAN CHASE BANK, N.A.	3rd First National Plaza Chicago, IL 60602	William Sholten 312-732-4600 william.sholten@jpmorgan.com	GMAC Mortgage, LLC	Custodial
1942	777175639	JPMORGAN CHASE BANK, N.A.	3rd First National Plaza Chicago, IL 60602	William Sholten 312-732-4600 william.sholten@jpmorgan.com	Residential Funding Company, LLC	Operating - Concentration
1943	777175647	JPMORGAN CHASE BANK, N.A.	3rd First National Plaza Chicago, IL 60602	William Sholten 312-732-4600 william.sholten@jpmorgan.com	GMAC Mortgage, LLC	Custodial
1944	777175654	JPMORGAN CHASE BANK, N.A.	3rd First National Plaza Chicago, IL 60602	William Sholten 312-732-4600 william.sholten@jpmorgan.com	GMAC Mortgage, LLC	Custodial
1945	777175688	JPMORGAN CHASE BANK, N.A.	3rd First National Plaza Chicago, IL 60602	William Sholten 312-732-4600 william.sholten@jpmorgan.com	GMAC Mortgage, LLC	Custodial
1946	777175738	JPMORGAN CHASE BANK, N.A.	3rd First National Plaza Chicago, IL 60602	William Sholten 312-732-4600 william.sholten@jpmorgan.com	GMAC Mortgage, LLC	Custodial
1947	777175761	JPMORGAN CHASE BANK, N.A.	3rd First National Plaza Chicago, IL 60602	William Sholten 312-732-4600 william.sholten@jpmorgan.com	GMAC Mortgage, LLC	Custodial
1948	777175779	JPMORGAN CHASE BANK, N.A.	3rd First National Plaza Chicago, IL 60602	William Sholten 312-732-4600 william.sholten@jpmorgan.com	GMAC Mortgage, LLC	Custodial
1949	777175787	JPMORGAN CHASE BANK, N.A.	3rd First National Plaza Chicago, IL 60602	William Sholten 312-732-4600 william.sholten@jpmorgan.com	GMAC Mortgage, LLC	Custodial
1950	777175803	JPMORGAN CHASE BANK, N.A.	3rd First National Plaza Chicago, IL 60602	William Sholten 312-732-4600 william.sholten@jpmorgan.com	GMAC Mortgage, LLC	Custodial
1951	777175829	JPMORGAN CHASE BANK, N.A.	3rd First National Plaza Chicago, IL 60602	William Sholten 312-732-4600 william.sholten@jpmorgan.com	GMAC Mortgage, LLC	Custodial
1952	777175837	JPMORGAN CHASE BANK, N.A.	3rd First National Plaza Chicago, IL 60602	William Sholten 312-732-4600 william.sholten@jpmorgan.com	GMAC Mortgage, LLC	Custodial
1953	777175845	JPMORGAN CHASE BANK, N.A.	3rd First National Plaza Chicago, IL 60602	William Sholten 312-732-4600 william.sholten@jpmorgan.com	GMAC Mortgage, LLC	Custodial
1954	777175852	JPMORGAN CHASE BANK, N.A.	3rd First National Plaza Chicago, IL 60602	William Sholten 312-732-4600 william.sholten@jpmorgan.com	GMAC Mortgage, LLC	Custodial
1955	777175886	JPMORGAN CHASE BANK, N.A.	3rd First National Plaza Chicago, IL 60602	William Sholten 312-732-4600 william.sholten@jpmorgan.com	GMAC Mortgage, LLC	Custodial
1956	777175928	JPMORGAN CHASE BANK, N.A.	3rd First National Plaza Chicago, IL 60602	William Sholten 312-732-4600 william.sholten@jpmorgan.com	GMAC Mortgage, LLC	Custodial
1957	777175936	JPMORGAN CHASE BANK, N.A.	3rd First National Plaza Chicago, IL 60602	William Sholten 312-732-4600 william.sholten@jpmorgan.com	GMAC Mortgage, LLC	Custodial
1958	777175951	JPMORGAN CHASE BANK, N.A.	3rd First National Plaza Chicago, IL 60602	William Sholten 312-732-4600 william.sholten@jpmorgan.com	Residential Funding Company, LLC	Operating - Concentration
1959	777175969	JPMORGAN CHASE BANK, N.A.	3rd First National Plaza Chicago, IL 60602	William Sholten 312-732-4600 william.sholten@jpmorgan.com	Residential Funding Company, LLC	Operating - Concentration
1960	777175985	JPMORGAN CHASE BANK, N.A.	3rd First National Plaza Chicago, IL 60602	William Sholten 312-732-4600 william.sholten@jpmorgan.com	GMAC Mortgage, LLC	Custodial
1961	777176041	JPMORGAN CHASE BANK, N.A.	3rd First National Plaza Chicago, IL 60602	William Sholten 312-732-4600 william.sholten@jpmorgan.com	GMAC Mortgage, LLC	Custodial
1962	777176058	JPMORGAN CHASE BANK, N.A.	3rd First National Plaza Chicago, IL 60602	William Sholten 312-732-4600 william.sholten@jpmorgan.com	GMAC Mortgage, LLC	Custodial
1963	777176082	JPMORGAN CHASE BANK, N.A.	3rd First National Plaza Chicago, IL 60602	William Sholten 312-732-4600 william.sholten@jpmorgan.com	GMAC Mortgage, LLC	Custodial
1964	777176090	JPMORGAN CHASE BANK, N.A.	3rd First National Plaza Chicago, IL 60602	William Sholten 312-732-4600 william.sholten@jpmorgan.com	GMAC Mortgage, LLC	Custodial
1965	777176157	JPMORGAN CHASE BANK, N.A.	3rd First National Plaza Chicago, IL 60602	William Sholten 312-732-4600 william.sholten@jpmorgan.com	GMAC Mortgage, LLC	Custodial
1966	777176165	JPMORGAN CHASE BANK, N.A.	3rd First National Plaza Chicago, IL 60602	William Sholten 312-732-4600 william.sholten@jpmorgan.com	GMAC Mortgage, LLC	Custodial
1967	777176173	JPMORGAN CHASE BANK, N.A.	3rd First National Plaza Chicago, IL 60602	William Sholten 312-732-4600 william.sholten@jpmorgan.com	GMAC Mortgage, LLC	Custodial
1968	777176181	JPMORGAN CHASE BANK, N.A.	3rd First National Plaza Chicago, IL 60602	William Sholten 312-732-4600 william.sholten@jpmorgan.com	GMAC Mortgage, LLC	Custodial
1969	777176249	JPMORGAN CHASE BANK, N.A.	3rd First National Plaza Chicago, IL 60602	William Sholten 312-732-4600 william.sholten@jpmorgan.com	GMAC Mortgage, LLC	Custodial
1970	777176256	JPMORGAN CHASE BANK, N.A.	3rd First National Plaza Chicago, IL 60602	William Sholten 312-732-4600 william.sholten@jpmorgan.com	GMAC Mortgage, LLC	Custodial
1971	777176264	JPMORGAN CHASE BANK, N.A.	3rd First National Plaza Chicago, IL 60602	William Sholten 312-732-4600 william.sholten@jpmorgan.com	GMAC Mortgage, LLC	Custodial
1972	777176272	JPMORGAN CHASE BANK, N.A.	3rd First National Plaza Chicago, IL 60602	William Sholten 312-732-4600 william.sholten@jpmorgan.com	GMAC Mortgage, LLC	Custodial
1973	777176280	JPMORGAN CHASE BANK, N.A.	3rd First National Plaza Chicago, IL 60602	William Sholten 312-732-4600 william.sholten@jpmorgan.com	GMAC Mortgage, LLC	Custodial
1974	777176306	JPMORGAN CHASE BANK, N.A.	3rd First National Plaza Chicago, IL 60602	William Sholten 312-732-4600 william.sholten@jpmorgan.com	GMAC Mortgage, LLC	Custodial
1975	777176314	JPMORGAN CHASE BANK, N.A.	3rd First National Plaza Chicago, IL 60602	William Sholten 312-732-4600 william.sholten@jpmorgan.com	GMAC Mortgage, LLC	Custodial
1976	777176355	JPMORGAN CHASE BANK, N.A.	3rd First National Plaza Chicago, IL 60602	William Sholten 312-732-4600 william.sholten@jpmorgan.com	GMAC Mortgage, LLC	Custodial
1977	777176363	JPMORGAN CHASE BANK, N.A.	3rd First National Plaza Chicago, IL 60602	William Sholten 312-732-4600 william.sholten@jpmorgan.com	GMAC Mortgage, LLC	Custodial
1978	777176371	JPMORGAN CHASE BANK, N.A.	3rd First National Plaza Chicago, IL 60602	William Sholten 312-732-4600 william.sholten@jpmorgan.com	GMAC Mortgage, LLC	Custodial

Privileged and Confidential

Exhibit B - Bank Accounts

Ref #	Account Number	Bank	Address	Contact	Corporate/Company Code	Account Type
1979	777176389	JPMORGAN CHASE BANK, N.A.	3rd First National Plaza Chicago, IL 60602	William Sholten 312-732-4600 william.sholten@jpmorgan.com	GMAC Mortgage, LLC	Custodial
1980	777176397	JPMORGAN CHASE BANK, N.A.	3rd First National Plaza Chicago, IL 60602	William Sholten 312-732-4600 william.sholten@jpmorgan.com	GMAC Mortgage, LLC	Custodial
1981	777176405	JPMORGAN CHASE BANK, N.A.	3rd First National Plaza Chicago, IL 60602	William Sholten 312-732-4600 william.sholten@jpmorgan.com	GMAC Mortgage, LLC	Custodial
1982	777176413	JPMORGAN CHASE BANK, N.A.	3rd First National Plaza Chicago, IL 60602	William Sholten 312-732-4600 william.sholten@jpmorgan.com	GMAC Mortgage, LLC	Custodial
1983	777176421	JPMORGAN CHASE BANK, N.A.	3rd First National Plaza Chicago, IL 60602	William Sholten 312-732-4600 william.sholten@jpmorgan.com	GMAC Mortgage, LLC	Custodial
1984	777176439	JPMORGAN CHASE BANK, N.A.	3rd First National Plaza Chicago, IL 60602	William Sholten 312-732-4600 william.sholten@jpmorgan.com	GMAC Mortgage, LLC	Custodial
1985	777176504	JPMORGAN CHASE BANK, N.A.	3rd First National Plaza Chicago, IL 60602	William Sholten 312-732-4600 william.sholten@jpmorgan.com	GMAC Mortgage, LLC	Custodial
1986	777176538	JPMORGAN CHASE BANK, N.A.	3rd First National Plaza Chicago, IL 60602	William Sholten 312-732-4600 william.sholten@jpmorgan.com	GMAC Mortgage, LLC	Custodial
1987	796649713	JPMORGAN CHASE BANK, N.A.	3rd First National Plaza Chicago, IL 60602	William Sholten 312-732-4600 william.sholten@jpmorgan.com	GMAC Mortgage, LLC	Custodial
1988	796649721	JPMORGAN CHASE BANK, N.A.	3rd First National Plaza Chicago, IL 60602	William Sholten 312-732-4600 william.sholten@jpmorgan.com	GMAC Mortgage, LLC	Custodial
1989	796649739	JPMORGAN CHASE BANK, N.A.	3rd First National Plaza Chicago, IL 60602	William Sholten 312-732-4600 william.sholten@jpmorgan.com	GMAC Mortgage, LLC	Custodial
1990	796649747	JPMORGAN CHASE BANK, N.A.	3rd First National Plaza Chicago, IL 60602	William Sholten 312-732-4600 william.sholten@jpmorgan.com	GMAC Mortgage, LLC	Custodial
1991	796649754	JPMORGAN CHASE BANK, N.A.	3rd First National Plaza Chicago, IL 60602	William Sholten 312-732-4600 william.sholten@jpmorgan.com	GMAC Mortgage, LLC	Custodial
1992	796649762	JPMORGAN CHASE BANK, N.A.	3rd First National Plaza Chicago, IL 60602	William Sholten 312-732-4600 william.sholten@jpmorgan.com	GMAC Mortgage, LLC	Custodial
1993	796649770	JPMORGAN CHASE BANK, N.A.	3rd First National Plaza Chicago, IL 60602	William Sholten 312-732-4600 william.sholten@jpmorgan.com	GMAC Mortgage, LLC	Custodial
1994	796649788	JPMORGAN CHASE BANK, N.A.	3rd First National Plaza Chicago, IL 60602	William Sholten 312-732-4600 william.sholten@jpmorgan.com	GMAC Mortgage, LLC	Custodial
1995	796649796	JPMORGAN CHASE BANK, N.A.	3rd First National Plaza Chicago, IL 60602	William Sholten 312-732-4600 william.sholten@jpmorgan.com	GMAC Mortgage, LLC	Custodial
1996	796649804	JPMORGAN CHASE BANK, N.A.	3rd First National Plaza Chicago, IL 60602	William Sholten 312-732-4600 william.sholten@jpmorgan.com	GMAC Mortgage, LLC	Custodial
1997	796649812	JPMORGAN CHASE BANK, N.A.	3rd First National Plaza Chicago, IL 60602	William Sholten 312-732-4600 william.sholten@jpmorgan.com	GMAC Mortgage, LLC	Custodial
1998	796649820	JPMORGAN CHASE BANK, N.A.	3rd First National Plaza Chicago, IL 60602	William Sholten 312-732-4600 william.sholten@jpmorgan.com	GMAC Mortgage, LLC	Custodial
1999	796649838	JPMORGAN CHASE BANK, N.A.	3rd First National Plaza Chicago, IL 60602	William Sholten 312-732-4600 william.sholten@jpmorgan.com	GMAC Mortgage, LLC	Custodial
2000	796649846	JPMORGAN CHASE BANK, N.A.	3rd First National Plaza Chicago, IL 60602	William Sholten 312-732-4600 william.sholten@jpmorgan.com	GMAC Mortgage, LLC	Custodial
2001	796649853	JPMORGAN CHASE BANK, N.A.	3rd First National Plaza Chicago, IL 60602	William Sholten 312-732-4600 william.sholten@jpmorgan.com	GMAC Mortgage, LLC	Custodial
2002	796649861	JPMORGAN CHASE BANK, N.A.	3rd First National Plaza Chicago, IL 60602	William Sholten 312-732-4600 william.sholten@jpmorgan.com	GMAC Mortgage, LLC	Custodial
2003	796649879	JPMORGAN CHASE BANK, N.A.	3rd First National Plaza Chicago, IL 60602	William Sholten 312-732-4600 william.sholten@jpmorgan.com	GMAC Mortgage, LLC	Custodial
2004	796649887	JPMORGAN CHASE BANK, N.A.	3rd First National Plaza Chicago, IL 60602	William Sholten 312-732-4600 william.sholten@jpmorgan.com	GMAC Mortgage, LLC	Custodial
2005	796649895	JPMORGAN CHASE BANK, N.A.	3rd First National Plaza Chicago, IL 60602	William Sholten 312-732-4600 william.sholten@jpmorgan.com	GMAC Mortgage, LLC	Custodial
2006	796649903	JPMORGAN CHASE BANK, N.A.	3rd First National Plaza Chicago, IL 60602	William Sholten 312-732-4600 william.sholten@jpmorgan.com	GMAC Mortgage, LLC	Custodial
2007	796649911	JPMORGAN CHASE BANK, N.A.	3rd First National Plaza Chicago, IL 60602	William Sholten 312-732-4600 william.sholten@jpmorgan.com	GMAC Mortgage, LLC	Custodial
2008	796649929	JPMORGAN CHASE BANK, N.A.	3rd First National Plaza Chicago, IL 60602	William Sholten 312-732-4600 william.sholten@jpmorgan.com	GMAC Mortgage, LLC	Custodial
2009	796649937	JPMORGAN CHASE BANK, N.A.	3rd First National Plaza Chicago, IL 60602	William Sholten 312-732-4600 william.sholten@jpmorgan.com	GMAC Mortgage, LLC	Custodial
2010	796649945	JPMORGAN CHASE BANK, N.A.	3rd First National Plaza Chicago, IL 60602	William Sholten 312-732-4600 william.sholten@jpmorgan.com	GMAC Mortgage, LLC	Custodial
2011	796649952	JPMORGAN CHASE BANK, N.A.	3rd First National Plaza Chicago, IL 60602	William Sholten 312-732-4600 william.sholten@jpmorgan.com	GMAC Mortgage, LLC	Custodial
2012	796649960	JPMORGAN CHASE BANK, N.A.	3rd First National Plaza Chicago, IL 60602	William Sholten 312-732-4600 william.sholten@jpmorgan.com	GMAC Mortgage, LLC	Custodial
2013	796649978	JPMORGAN CHASE BANK, N.A.	3rd First National Plaza Chicago, IL 60602	William Sholten 312-732-4600 william.sholten@jpmorgan.com	GMAC Mortgage, LLC	Custodial
2014	796649986	JPMORGAN CHASE BANK, N.A.	3rd First National Plaza Chicago, IL 60602	William Sholten 312-732-4600 william.sholten@jpmorgan.com	GMAC Mortgage, LLC	Custodial
2015	796649994	JPMORGAN CHASE BANK, N.A.	3rd First National Plaza Chicago, IL 60602	William Sholten 312-732-4600 william.sholten@jpmorgan.com	GMAC Mortgage, LLC	Custodial
2016	796650000	JPMORGAN CHASE BANK, N.A.	3rd First National Plaza Chicago, IL 60602	William Sholten 312-732-4600 william.sholten@jpmorgan.com	GMAC Mortgage, LLC	Custodial
2017	796650018	JPMORGAN CHASE BANK, N.A.	3rd First National Plaza Chicago, IL 60602	William Sholten 312-732-4600 william.sholten@jpmorgan.com	GMAC Mortgage, LLC	Custodial
2018	796650026	JPMORGAN CHASE BANK, N.A.	3rd First National Plaza Chicago, IL 60602	William Sholten 312-732-4600 william.sholten@jpmorgan.com	GMAC Mortgage, LLC	Custodial
2019	796650034	JPMORGAN CHASE BANK, N.A.	3rd First National Plaza Chicago, IL 60602	William Sholten 312-732-4600 william.sholten@jpmorgan.com	GMAC Mortgage, LLC	Custodial
2020	796650042	JPMORGAN CHASE BANK, N.A.	3rd First National Plaza Chicago, IL 60602	William Sholten 312-732-4600 william.sholten@jpmorgan.com	GMAC Mortgage, LLC	Custodial
2021	796650059	JPMORGAN CHASE BANK, N.A.	3rd First National Plaza Chicago, IL 60602	William Sholten 312-732-4600 william.sholten@jpmorgan.com	GMAC Mortgage, LLC	Custodial

Privileged and Confidential

Exhibit B - Bank Accounts

Ref #	Account Number	Bank	Address	Contact	Corporate/Company Code	Account Type
2022	796650067	JPMORGAN CHASE BANK, N.A.	3rd First National Plaza Chicago, IL 60602	William Sholten 312-732-4600 william.sholten@jpmorgan.com	GMAC Mortgage, LLC	Custodial
2023	796650075	JPMORGAN CHASE BANK, N.A.	3rd First National Plaza Chicago, IL 60602	William Sholten 312-732-4600 william.sholten@jpmorgan.com	GMAC Mortgage, LLC	Custodial
2024	796650083	JPMORGAN CHASE BANK, N.A.	3rd First National Plaza Chicago, IL 60602	William Sholten 312-732-4600 william.sholten@jpmorgan.com	GMAC Mortgage, LLC	Custodial
2025	796650091	JPMORGAN CHASE BANK, N.A.	3rd First National Plaza Chicago, IL 60602	William Sholten 312-732-4600 william.sholten@jpmorgan.com	GMAC Mortgage, LLC	Custodial
2026	796650109	JPMORGAN CHASE BANK, N.A.	3rd First National Plaza Chicago, IL 60602	William Sholten 312-732-4600 william.sholten@jpmorgan.com	GMAC Mortgage, LLC	Custodial
2027	796650117	JPMORGAN CHASE BANK, N.A.	3rd First National Plaza Chicago, IL 60602	William Sholten 312-732-4600 william.sholten@jpmorgan.com	GMAC Mortgage, LLC	Custodial
2028	796650125	JPMORGAN CHASE BANK, N.A.	3rd First National Plaza Chicago, IL 60602	William Sholten 312-732-4600 william.sholten@jpmorgan.com	GMAC Mortgage, LLC	Custodial
2029	796650133	JPMORGAN CHASE BANK, N.A.	3rd First National Plaza Chicago, IL 60602	William Sholten 312-732-4600 william.sholten@jpmorgan.com	GMAC Mortgage, LLC	Custodial
2030	796650141	JPMORGAN CHASE BANK, N.A.	3rd First National Plaza Chicago, IL 60602	William Sholten 312-732-4600 william.sholten@jpmorgan.com	GMAC Mortgage, LLC	Custodial
2031	796650158	JPMORGAN CHASE BANK, N.A.	3rd First National Plaza Chicago, IL 60602	William Sholten 312-732-4600 william.sholten@jpmorgan.com	GMAC Mortgage, LLC	Custodial
2032	796650166	JPMORGAN CHASE BANK, N.A.	3rd First National Plaza Chicago, IL 60602	William Sholten 312-732-4600 william.sholten@jpmorgan.com	GMAC Mortgage, LLC	Custodial
2033	796650174	JPMORGAN CHASE BANK, N.A.	3rd First National Plaza Chicago, IL 60602	William Sholten 312-732-4600 william.sholten@jpmorgan.com	GMAC Mortgage, LLC	Custodial
2034	796650182	JPMORGAN CHASE BANK, N.A.	3rd First National Plaza Chicago, IL 60602	William Sholten 312-732-4600 william.sholten@jpmorgan.com	GMAC Mortgage, LLC	Custodial
2035	796650190	JPMORGAN CHASE BANK, N.A.	3rd First National Plaza Chicago, IL 60602	William Sholten 312-732-4600 william.sholten@jpmorgan.com	GMAC Mortgage, LLC	Custodial
2036	796650208	JPMORGAN CHASE BANK, N.A.	3rd First National Plaza Chicago, IL 60602	William Sholten 312-732-4600 william.sholten@jpmorgan.com	GMAC Mortgage, LLC	Custodial
2037	796650216	JPMORGAN CHASE BANK, N.A.	3rd First National Plaza Chicago, IL 60602	William Sholten 312-732-4600 william.sholten@jpmorgan.com	GMAC Mortgage, LLC	Custodial
2038	796650224	JPMORGAN CHASE BANK, N.A.	3rd First National Plaza Chicago, IL 60602	William Sholten 312-732-4600 william.sholten@jpmorgan.com	GMAC Mortgage, LLC	Custodial
2039	796650232	JPMORGAN CHASE BANK, N.A.	3rd First National Plaza Chicago, IL 60602	William Sholten 312-732-4600 william.sholten@jpmorgan.com	GMAC Mortgage, LLC	Custodial
2040	796650240	JPMORGAN CHASE BANK, N.A.	3rd First National Plaza Chicago, IL 60602	William Sholten 312-732-4600 william.sholten@jpmorgan.com	GMAC Mortgage, LLC	Custodial
2041	796650257	JPMORGAN CHASE BANK, N.A.	3rd First National Plaza Chicago, IL 60602	William Sholten 312-732-4600 william.sholten@jpmorgan.com	GMAC Mortgage, LLC	Custodial
2042	796650265	JPMORGAN CHASE BANK, N.A.	3rd First National Plaza Chicago, IL 60602	William Sholten 312-732-4600 william.sholten@jpmorgan.com	GMAC Mortgage, LLC	Custodial
2043	796650273	JPMORGAN CHASE BANK, N.A.	3rd First National Plaza Chicago, IL 60602	William Sholten 312-732-4600 william.sholten@jpmorgan.com	GMAC Mortgage, LLC	Custodial
2044	796650281	JPMORGAN CHASE BANK, N.A.	3rd First National Plaza Chicago, IL 60602	William Sholten 312-732-4600 william.sholten@jpmorgan.com	GMAC Mortgage, LLC	Custodial
2045	796650299	JPMORGAN CHASE BANK, N.A.	3rd First National Plaza Chicago, IL 60602	William Sholten 312-732-4600 william.sholten@jpmorgan.com	GMAC Mortgage, LLC	Custodial
2046	796650307	JPMORGAN CHASE BANK, N.A.	3rd First National Plaza Chicago, IL 60602	William Sholten 312-732-4600 william.sholten@jpmorgan.com	GMAC Mortgage, LLC	Custodial
2047	796650315	JPMORGAN CHASE BANK, N.A.	3rd First National Plaza Chicago, IL 60602	William Sholten 312-732-4600 william.sholten@jpmorgan.com	GMAC Mortgage, LLC	Custodial
2048	796651420	JPMORGAN CHASE BANK, N.A.	3rd First National Plaza Chicago, IL 60602	William Sholten 312-732-4600 william.sholten@jpmorgan.com	GMAC Mortgage, LLC	Custodial
2049	796651842	JPMORGAN CHASE BANK, N.A.	3rd First National Plaza Chicago, IL 60602	William Sholten 312-732-4600 william.sholten@jpmorgan.com	GMAC Mortgage, LLC	Custodial
2050	796653483	JPMORGAN CHASE BANK, N.A.	3rd First National Plaza Chicago, IL 60602	William Sholten 312-732-4600 william.sholten@jpmorgan.com	GMAC Mortgage, LLC	Custodial
2051	796653509	JPMORGAN CHASE BANK, N.A.	3rd First National Plaza Chicago, IL 60602	William Sholten 312-732-4600 william.sholten@jpmorgan.com	GMAC Mortgage, LLC	Custodial
2052	796655041	JPMORGAN CHASE BANK, N.A.	3rd First National Plaza Chicago, IL 60602	William Sholten 312-732-4600 william.sholten@jpmorgan.com	GMAC Mortgage, LLC	Custodial
2053	796655058	JPMORGAN CHASE BANK, N.A.	3rd First National Plaza Chicago, IL 60602	William Sholten 312-732-4600 william.sholten@jpmorgan.com	GMAC Mortgage, LLC	Custodial
2054	796655066	JPMORGAN CHASE BANK, N.A.	3rd First National Plaza Chicago, IL 60602	William Sholten 312-732-4600 william.sholten@jpmorgan.com	GMAC Mortgage, LLC	Custodial
2055	796655082	JPMORGAN CHASE BANK, N.A.	3rd First National Plaza Chicago, IL 60602	William Sholten 312-732-4600 william.sholten@jpmorgan.com	GMAC Mortgage, LLC	Custodial
2056	796655736	JPMORGAN CHASE BANK, N.A.	3rd First National Plaza Chicago, IL 60602	William Sholten 312-732-4600 william.sholten@jpmorgan.com	GMAC Mortgage, LLC	Custodial
2057	796655744	JPMORGAN CHASE BANK, N.A.	3rd First National Plaza Chicago, IL 60602	William Sholten 312-732-4600 william.sholten@jpmorgan.com	GMAC Mortgage, LLC	Custodial
2058	796656411	JPMORGAN CHASE BANK, N.A.	3rd First National Plaza Chicago, IL 60602	William Sholten 312-732-4600 william.sholten@jpmorgan.com	GMAC Mortgage, LLC	Custodial
2059	796656627	JPMORGAN CHASE BANK, N.A.	3rd First National Plaza Chicago, IL 60602	William Sholten 312-732-4600 william.sholten@jpmorgan.com	GMAC Mortgage, LLC	Custodial
2060	796657385	JPMORGAN CHASE BANK, N.A.	3rd First National Plaza Chicago, IL 60602	William Sholten 312-732-4600 william.sholten@jpmorgan.com	GMAC Mortgage, LLC	Custodial
2061	796657633	JPMORGAN CHASE BANK, N.A.	3rd First National Plaza Chicago, IL 60602	William Sholten 312-732-4600 william.sholten@jpmorgan.com	GMAC Mortgage, LLC	Custodial
2062	796658144	JPMORGAN CHASE BANK, N.A.	3rd First National Plaza Chicago, IL 60602	William Sholten 312-732-4600 william.sholten@jpmorgan.com	GMAC Mortgage, LLC	Custodial
2063	796658151	JPMORGAN CHASE BANK, N.A.	3rd First National Plaza Chicago, IL 60602	William Sholten 312-732-4600 william.sholten@jpmorgan.com	GMAC Mortgage, LLC	Custodial
2064	796658169	JPMORGAN CHASE BANK, N.A.	3rd First National Plaza Chicago, IL 60602	William Sholten 312-732-4600 william.sholten@jpmorgan.com	GMAC Mortgage, LLC	Custodial

Privileged and Confidential

Exhibit B - Bank Accounts

Ref #	Account Number	Bank	Address	Contact	Corporate/Company Code	Account Type
2065	796658177	JPMORGAN CHASE BANK, N.A.	3rd First National Plaza Chicago, IL 60602	William Sholten 312-732-4600 william.sholten@jpmorgan.com	GMAC Mortgage, LLC	Custodial
2066	796658185	JPMORGAN CHASE BANK, N.A.	3rd First National Plaza Chicago, IL 60602	William Sholten 312-732-4600 william.sholten@jpmorgan.com	GMAC Mortgage, LLC	Custodial
2067	796658193	JPMORGAN CHASE BANK, N.A.	3rd First National Plaza Chicago, IL 60602	William Sholten 312-732-4600 william.sholten@jpmorgan.com	GMAC Mortgage, LLC	Custodial
2068	796658201	JPMORGAN CHASE BANK, N.A.	3rd First National Plaza Chicago, IL 60602	William Sholten 312-732-4600 william.sholten@jpmorgan.com	GMAC Mortgage, LLC	Custodial
2069	796658219	JPMORGAN CHASE BANK, N.A.	3rd First National Plaza Chicago, IL 60602	William Sholten 312-732-4600 william.sholten@jpmorgan.com	GMAC Mortgage, LLC	Custodial
2070	796658227	JPMORGAN CHASE BANK, N.A.	3rd First National Plaza Chicago, IL 60602	William Sholten 312-732-4600 william.sholten@jpmorgan.com	GMAC Mortgage, LLC	Custodial
2071	796658250	JPMORGAN CHASE BANK, N.A.	3rd First National Plaza Chicago, IL 60602	William Sholten 312-732-4600 william.sholten@jpmorgan.com	GMAC Mortgage, LLC	Custodial
2072	796658300	JPMORGAN CHASE BANK, N.A.	3rd First National Plaza Chicago, IL 60602	William Sholten 312-732-4600 william.sholten@jpmorgan.com	GMAC Mortgage, LLC	Custodial
2073	796671543	JPMORGAN CHASE BANK, N.A.	3rd First National Plaza Chicago, IL 60602	William Sholten 312-732-4600 william.sholten@jpmorgan.com	GMAC Mortgage, LLC	Custodial
2074	796671550	JPMORGAN CHASE BANK, N.A.	3rd First National Plaza Chicago, IL 60602	William Sholten 312-732-4600 william.sholten@jpmorgan.com	GMAC Mortgage, LLC	Custodial
2075	796671626	JPMORGAN CHASE BANK, N.A.	3rd First National Plaza Chicago, IL 60602	William Sholten 312-732-4600 william.sholten@jpmorgan.com	GMAC Mortgage, LLC	Custodial
2076	796671634	JPMORGAN CHASE BANK, N.A.	3rd First National Plaza Chicago, IL 60602	William Sholten 312-732-4600 william.sholten@jpmorgan.com	GMAC Mortgage, LLC	Custodial
2077	796671667	JPMORGAN CHASE BANK, N.A.	3rd First National Plaza Chicago, IL 60602	William Sholten 312-732-4600 william.sholten@jpmorgan.com	GMAC Mortgage, LLC	Custodial
2078	796671675	JPMORGAN CHASE BANK, N.A.	3rd First National Plaza Chicago, IL 60602	William Sholten 312-732-4600 william.sholten@jpmorgan.com	GMAC Mortgage, LLC	Custodial
2079	796671683	JPMORGAN CHASE BANK, N.A.	3rd First National Plaza Chicago, IL 60602	William Sholten 312-732-4600 william.sholten@jpmorgan.com	GMAC Mortgage, LLC	Custodial
2080	796671709	JPMORGAN CHASE BANK, N.A.	3rd First National Plaza Chicago, IL 60602	William Sholten 312-732-4600 william.sholten@jpmorgan.com	GMAC Mortgage, LLC	Custodial
2081	796671717	JPMORGAN CHASE BANK, N.A.	3rd First National Plaza Chicago, IL 60602	William Sholten 312-732-4600 william.sholten@jpmorgan.com	GMAC Mortgage, LLC	Custodial
2082	796671733	JPMORGAN CHASE BANK, N.A.	3rd First National Plaza Chicago, IL 60602	William Sholten 312-732-4600 william.sholten@jpmorgan.com	GMAC Mortgage, LLC	Custodial
2083	796671774	JPMORGAN CHASE BANK, N.A.	3rd First National Plaza Chicago, IL 60602	William Sholten 312-732-4600 william.sholten@jpmorgan.com	GMAC Mortgage, LLC	Custodial
2084	796671782	JPMORGAN CHASE BANK, N.A.	3rd First National Plaza Chicago, IL 60602	William Sholten 312-732-4600 william.sholten@jpmorgan.com	GMAC Mortgage, LLC	Custodial
2085	796671790	JPMORGAN CHASE BANK, N.A.	3rd First National Plaza Chicago, IL 60602	William Sholten 312-732-4600 william.sholten@jpmorgan.com	GMAC Mortgage, LLC	Custodial
2086	796671808	JPMORGAN CHASE BANK, N.A.	3rd First National Plaza Chicago, IL 60602	William Sholten 312-732-4600 william.sholten@jpmorgan.com	GMAC Mortgage, LLC	Custodial
2087	796671816	JPMORGAN CHASE BANK, N.A.	3rd First National Plaza Chicago, IL 60602	William Sholten 312-732-4600 william.sholten@jpmorgan.com	GMAC Mortgage, LLC	Custodial
2088	796671824	JPMORGAN CHASE BANK, N.A.	3rd First National Plaza Chicago, IL 60602	William Sholten 312-732-4600 william.sholten@jpmorgan.com	GMAC Mortgage, LLC	Custodial
2089	796671857	JPMORGAN CHASE BANK, N.A.	3rd First National Plaza Chicago, IL 60602	William Sholten 312-732-4600 william.sholten@jpmorgan.com	GMAC Mortgage, LLC	Custodial
2090	796671865	JPMORGAN CHASE BANK, N.A.	3rd First National Plaza Chicago, IL 60602	William Sholten 312-732-4600 william.sholten@jpmorgan.com	GMAC Mortgage, LLC	Custodial
2091	796671873	JPMORGAN CHASE BANK, N.A.	3rd First National Plaza Chicago, IL 60602	William Sholten 312-732-4600 william.sholten@jpmorgan.com	GMAC Mortgage, LLC	Custodial
2092	796671881	JPMORGAN CHASE BANK, N.A.	3rd First National Plaza Chicago, IL 60602	William Sholten 312-732-4600 william.sholten@jpmorgan.com	GMAC Mortgage, LLC	Custodial
2093	796671899	JPMORGAN CHASE BANK, N.A.	3rd First National Plaza Chicago, IL 60602	William Sholten 312-732-4600 william.sholten@jpmorgan.com	GMAC Mortgage, LLC	Custodial
2094	796671907	JPMORGAN CHASE BANK, N.A.	3rd First National Plaza Chicago, IL 60602	William Sholten 312-732-4600 william.sholten@jpmorgan.com	GMAC Mortgage, LLC	Custodial
2095	796671915	JPMORGAN CHASE BANK, N.A.	3rd First National Plaza Chicago, IL 60602	William Sholten 312-732-4600 william.sholten@jpmorgan.com	GMAC Mortgage, LLC	Custodial
2096	796671931	JPMORGAN CHASE BANK, N.A.	3rd First National Plaza Chicago, IL 60602	William Sholten 312-732-4600 william.sholten@jpmorgan.com	GMAC Mortgage, LLC	Custodial
2097	796671949	JPMORGAN CHASE BANK, N.A.	3rd First National Plaza Chicago, IL 60602	William Sholten 312-732-4600 william.sholten@jpmorgan.com	GMAC Mortgage, LLC	Custodial
2098	796671956	JPMORGAN CHASE BANK, N.A.	3rd First National Plaza Chicago, IL 60602	William Sholten 312-732-4600 william.sholten@jpmorgan.com	GMAC Mortgage, LLC	Custodial
2099	796671964	JPMORGAN CHASE BANK, N.A.	3rd First National Plaza Chicago, IL 60602	William Sholten 312-732-4600 william.sholten@jpmorgan.com	GMAC Mortgage, LLC	Custodial
2100	796671972	JPMORGAN CHASE BANK, N.A.	3rd First National Plaza Chicago, IL 60602	William Sholten 312-732-4600 william.sholten@jpmorgan.com	GMAC Mortgage, LLC	Custodial
2101	796672012	JPMORGAN CHASE BANK, N.A.	3rd First National Plaza Chicago, IL 60602	William Sholten 312-732-4600 william.sholten@jpmorgan.com	GMAC Mortgage, LLC	Custodial
2102	796672020	JPMORGAN CHASE BANK, N.A.	3rd First National Plaza Chicago, IL 60602	William Sholten 312-732-4600 william.sholten@jpmorgan.com	GMAC Mortgage, LLC	Custodial
2103	796672038	JPMORGAN CHASE BANK, N.A.	3rd First National Plaza Chicago, IL 60602	William Sholten 312-732-4600 william.sholten@jpmorgan.com	GMAC Mortgage, LLC	Custodial
2104	796672046	JPMORGAN CHASE BANK, N.A.	3rd First National Plaza Chicago, IL 60602	William Sholten 312-732-4600 william.sholten@jpmorgan.com	GMAC Mortgage, LLC	Custodial
2105	796672053	JPMORGAN CHASE BANK, N.A.	3rd First National Plaza Chicago, IL 60602	William Sholten 312-732-4600 william.sholten@jpmorgan.com	GMAC Mortgage, LLC	Custodial
2106	796672061	JPMORGAN CHASE BANK, N.A.	3rd First National Plaza Chicago, IL 60602	William Sholten 312-732-4600 william.sholten@jpmorgan.com	GMAC Mortgage, LLC	Custodial
2107	796672079	JPMORGAN CHASE BANK, N.A.	3rd First National Plaza Chicago, IL 60602	William Sholten 312-732-4600 william.sholten@jpmorgan.com	GMAC Mortgage, LLC	Custodial

Privileged and Confidential

Exhibit B - Bank Accounts

Ref #	Account Number	Bank	Address	Contact	Corporate/Company Code	Account Type
2108	796672087	JPMORGAN CHASE BANK, N.A.	3rd First National Plaza Chicago, IL 60602	William Sholten 312-732-4600 william.sholten@jpmorgan.com	GMAC Mortgage, LLC	Custodial
2109	796672095	JPMORGAN CHASE BANK, N.A.	3rd First National Plaza Chicago, IL 60602	William Sholten 312-732-4600 william.sholten@jpmorgan.com	GMAC Mortgage, LLC	Custodial
2110	796672103	JPMORGAN CHASE BANK, N.A.	3rd First National Plaza Chicago, IL 60602	William Sholten 312-732-4600 william.sholten@jpmorgan.com	GMAC Mortgage, LLC	Custodial
2111	796672111	JPMORGAN CHASE BANK, N.A.	3rd First National Plaza Chicago, IL 60602	William Sholten 312-732-4600 william.sholten@jpmorgan.com	GMAC Mortgage, LLC	Custodial
2112	796672129	JPMORGAN CHASE BANK, N.A.	3rd First National Plaza Chicago, IL 60602	William Sholten 312-732-4600 william.sholten@jpmorgan.com	GMAC Mortgage, LLC	Custodial
2113	796672137	JPMORGAN CHASE BANK, N.A.	3rd First National Plaza Chicago, IL 60602	William Sholten 312-732-4600 william.sholten@jpmorgan.com	GMAC Mortgage, LLC	Custodial
2114	796672145	JPMORGAN CHASE BANK, N.A.	3rd First National Plaza Chicago, IL 60602	William Sholten 312-732-4600 william.sholten@jpmorgan.com	GMAC Mortgage, LLC	Custodial
2115	796672152	JPMORGAN CHASE BANK, N.A.	3rd First National Plaza Chicago, IL 60602	William Sholten 312-732-4600 william.sholten@jpmorgan.com	GMAC Mortgage, LLC	Custodial
2116	796672160	JPMORGAN CHASE BANK, N.A.	3rd First National Plaza Chicago, IL 60602	William Sholten 312-732-4600 william.sholten@jpmorgan.com	GMAC Mortgage, LLC	Custodial
2117	796672178	JPMORGAN CHASE BANK, N.A.	3rd First National Plaza Chicago, IL 60602	William Sholten 312-732-4600 william.sholten@jpmorgan.com	GMAC Mortgage, LLC	Custodial
2118	796672186	JPMORGAN CHASE BANK, N.A.	3rd First National Plaza Chicago, IL 60602	William Sholten 312-732-4600 william.sholten@jpmorgan.com	GMAC Mortgage, LLC	Custodial
2119	796672194	JPMORGAN CHASE BANK, N.A.	3rd First National Plaza Chicago, IL 60602	William Sholten 312-732-4600 william.sholten@jpmorgan.com	GMAC Mortgage, LLC	Custodial
2120	796672202	JPMORGAN CHASE BANK, N.A.	3rd First National Plaza Chicago, IL 60602	William Sholten 312-732-4600 william.sholten@jpmorgan.com	GMAC Mortgage, LLC	Custodial
2121	796672210	JPMORGAN CHASE BANK, N.A.	3rd First National Plaza Chicago, IL 60602	William Sholten 312-732-4600 william.sholten@jpmorgan.com	GMAC Mortgage, LLC	Custodial
2122	796672236	JPMORGAN CHASE BANK, N.A.	3rd First National Plaza Chicago, IL 60602	William Sholten 312-732-4600 william.sholten@jpmorgan.com	GMAC Mortgage, LLC	Custodial
2123	796672244	JPMORGAN CHASE BANK, N.A.	3rd First National Plaza Chicago, IL 60602	William Sholten 312-732-4600 william.sholten@jpmorgan.com	GMAC Mortgage, LLC	Custodial
2124	796672251	JPMORGAN CHASE BANK, N.A.	3rd First National Plaza Chicago, IL 60602	William Sholten 312-732-4600 william.sholten@jpmorgan.com	GMAC Mortgage, LLC	Custodial
2125	796672269	JPMORGAN CHASE BANK, N.A.	3rd First National Plaza Chicago, IL 60602	William Sholten 312-732-4600 william.sholten@jpmorgan.com	GMAC Mortgage, LLC	Custodial
2126	796672277	JPMORGAN CHASE BANK, N.A.	3rd First National Plaza Chicago, IL 60602	William Sholten 312-732-4600 william.sholten@jpmorgan.com	GMAC Mortgage, LLC	Custodial
2127	796672285	JPMORGAN CHASE BANK, N.A.	3rd First National Plaza Chicago, IL 60602	William Sholten 312-732-4600 william.sholten@jpmorgan.com	GMAC Mortgage, LLC	Custodial
2128	796672293	JPMORGAN CHASE BANK, N.A.	3rd First National Plaza Chicago, IL 60602	William Sholten 312-732-4600 william.sholten@jpmorgan.com	GMAC Mortgage, LLC	Custodial
2129	796672301	JPMORGAN CHASE BANK, N.A.	3rd First National Plaza Chicago, IL 60602	William Sholten 312-732-4600 william.sholten@jpmorgan.com	GMAC Mortgage, LLC	Custodial
2130	796672319	JPMORGAN CHASE BANK, N.A.	3rd First National Plaza Chicago, IL 60602	William Sholten 312-732-4600 william.sholten@jpmorgan.com	GMAC Mortgage, LLC	Custodial
2131	796672327	JPMORGAN CHASE BANK, N.A.	3rd First National Plaza Chicago, IL 60602	William Sholten 312-732-4600 william.sholten@jpmorgan.com	GMAC Mortgage, LLC	Custodial
2132	796672335	JPMORGAN CHASE BANK, N.A.	3rd First National Plaza Chicago, IL 60602	William Sholten 312-732-4600 william.sholten@jpmorgan.com	GMAC Mortgage, LLC	Custodial
2133	796672343	JPMORGAN CHASE BANK, N.A.	3rd First National Plaza Chicago, IL 60602	William Sholten 312-732-4600 william.sholten@jpmorgan.com	GMAC Mortgage, LLC	Custodial
2134	796672350	JPMORGAN CHASE BANK, N.A.	3rd First National Plaza Chicago, IL 60602	William Sholten 312-732-4600 william.sholten@jpmorgan.com	GMAC Mortgage, LLC	Custodial
2135	796672368	JPMORGAN CHASE BANK, N.A.	3rd First National Plaza Chicago, IL 60602	William Sholten 312-732-4600 william.sholten@jpmorgan.com	GMAC Mortgage, LLC	Custodial
2136	796672376	JPMORGAN CHASE BANK, N.A.	3rd First National Plaza Chicago, IL 60602	William Sholten 312-732-4600 william.sholten@jpmorgan.com	GMAC Mortgage, LLC	Custodial
2137	796672384	JPMORGAN CHASE BANK, N.A.	3rd First National Plaza Chicago, IL 60602	William Sholten 312-732-4600 william.sholten@jpmorgan.com	GMAC Mortgage, LLC	Custodial
2138	796672392	JPMORGAN CHASE BANK, N.A.	3rd First National Plaza Chicago, IL 60602	William Sholten 312-732-4600 william.sholten@jpmorgan.com	GMAC Mortgage, LLC	Custodial
2139	796672400	JPMORGAN CHASE BANK, N.A.	3rd First National Plaza Chicago, IL 60602	William Sholten 312-732-4600 william.sholten@jpmorgan.com	GMAC Mortgage, LLC	Custodial
2140	796672418	JPMORGAN CHASE BANK, N.A.	3rd First National Plaza Chicago, IL 60602	William Sholten 312-732-4600 william.sholten@jpmorgan.com	GMAC Mortgage, LLC	Custodial
2141	796672426	JPMORGAN CHASE BANK, N.A.	3rd First National Plaza Chicago, IL 60602	William Sholten 312-732-4600 william.sholten@jpmorgan.com	GMAC Mortgage, LLC	Custodial
2142	796672434	JPMORGAN CHASE BANK, N.A.	3rd First National Plaza Chicago, IL 60602	William Sholten 312-732-4600 william.sholten@jpmorgan.com	GMAC Mortgage, LLC	Custodial
2143	796672442	JPMORGAN CHASE BANK, N.A.	3rd First National Plaza Chicago, IL 60602	William Sholten 312-732-4600 william.sholten@jpmorgan.com	GMAC Mortgage, LLC	Custodial
2144	796672459	JPMORGAN CHASE BANK, N.A.	3rd First National Plaza Chicago, IL 60602	William Sholten 312-732-4600 william.sholten@jpmorgan.com	GMAC Mortgage, LLC	Custodial
2145	796672467	JPMORGAN CHASE BANK, N.A.	3rd First National Plaza Chicago, IL 60602	William Sholten 312-732-4600 william.sholten@jpmorgan.com	GMAC Mortgage, LLC	Custodial
2146	796672475	JPMORGAN CHASE BANK, N.A.	3rd First National Plaza Chicago, IL 60602	William Sholten 312-732-4600 william.sholten@jpmorgan.com	GMAC Mortgage, LLC	Custodial
2147	796672483	JPMORGAN CHASE BANK, N.A.	3rd First National Plaza Chicago, IL 60602	William Sholten 312-732-4600 william.sholten@jpmorgan.com	GMAC Mortgage, LLC	Custodial
2148	796672491	JPMORGAN CHASE BANK, N.A.	3rd First National Plaza Chicago, IL 60602	William Sholten 312-732-4600 william.sholten@jpmorgan.com	GMAC Mortgage, LLC	Custodial
2149	796672509	JPMORGAN CHASE BANK, N.A.	3rd First National Plaza Chicago, IL 60602	William Sholten 312-732-4600 william.sholten@jpmorgan.com	GMAC Mortgage, LLC	Custodial
2150	796672517	JPMORGAN CHASE BANK, N.A.	3rd First National Plaza Chicago, IL 60602	William Sholten 312-732-4600 william.sholten@jpmorgan.com	GMAC Mortgage, LLC	Custodial

Privileged and Confidential

Exhibit B - Bank Accounts

Ref #	Account Number	Bank	Address	Contact	Corporate/Company Code	Account Type
2151	796672525	JPMORGAN CHASE BANK, N.A.	3rd First National Plaza Chicago, IL 60602	William Sholten 312-732-4600 william.sholten@jpmorgan.com	GMAC Mortgage, LLC	Custodial
2152	796672533	JPMORGAN CHASE BANK, N.A.	3rd First National Plaza Chicago, IL 60602	William Sholten 312-732-4600 william.sholten@jpmorgan.com	GMAC Mortgage, LLC	Custodial
2153	796672541	JPMORGAN CHASE BANK, N.A.	3rd First National Plaza Chicago, IL 60602	William Sholten 312-732-4600 william.sholten@jpmorgan.com	GMAC Mortgage, LLC	Custodial
2154	796672558	JPMORGAN CHASE BANK, N.A.	3rd First National Plaza Chicago, IL 60602	William Sholten 312-732-4600 william.sholten@jpmorgan.com	GMAC Mortgage, LLC	Custodial
2155	796672566	JPMORGAN CHASE BANK, N.A.	3rd First National Plaza Chicago, IL 60602	William Sholten 312-732-4600 william.sholten@jpmorgan.com	GMAC Mortgage, LLC	Custodial
2156	796672574	JPMORGAN CHASE BANK, N.A.	3rd First National Plaza Chicago, IL 60602	William Sholten 312-732-4600 william.sholten@jpmorgan.com	GMAC Mortgage, LLC	Custodial
2157	796672582	JPMORGAN CHASE BANK, N.A.	3rd First National Plaza Chicago, IL 60602	William Sholten 312-732-4600 william.sholten@jpmorgan.com	GMAC Mortgage, LLC	Custodial
2158	796672590	JPMORGAN CHASE BANK, N.A.	3rd First National Plaza Chicago, IL 60602	William Sholten 312-732-4600 william.sholten@jpmorgan.com	GMAC Mortgage, LLC	Custodial
2159	796672608	JPMORGAN CHASE BANK, N.A.	3rd First National Plaza Chicago, IL 60602	William Sholten 312-732-4600 william.sholten@jpmorgan.com	GMAC Mortgage, LLC	Custodial
2160	796672616	JPMORGAN CHASE BANK, N.A.	3rd First National Plaza Chicago, IL 60602	William Sholten 312-732-4600 william.sholten@jpmorgan.com	GMAC Mortgage, LLC	Custodial
2161	796672624	JPMORGAN CHASE BANK, N.A.	3rd First National Plaza Chicago, IL 60602	William Sholten 312-732-4600 william.sholten@jpmorgan.com	GMAC Mortgage, LLC	Custodial
2162	796672632	JPMORGAN CHASE BANK, N.A.	3rd First National Plaza Chicago, IL 60602	William Sholten 312-732-4600 william.sholten@jpmorgan.com	GMAC Mortgage, LLC	Custodial
2163	796672640	JPMORGAN CHASE BANK, N.A.	3rd First National Plaza Chicago, IL 60602	William Sholten 312-732-4600 william.sholten@jpmorgan.com	GMAC Mortgage, LLC	Custodial
2164	796672657	JPMORGAN CHASE BANK, N.A.	3rd First National Plaza Chicago, IL 60602	William Sholten 312-732-4600 william.sholten@jpmorgan.com	GMAC Mortgage, LLC	Custodial
2165	796672665	JPMORGAN CHASE BANK, N.A.	3rd First National Plaza Chicago, IL 60602	William Sholten 312-732-4600 william.sholten@jpmorgan.com	GMAC Mortgage, LLC	Custodial
2166	796672673	JPMORGAN CHASE BANK, N.A.	3rd First National Plaza Chicago, IL 60602	William Sholten 312-732-4600 william.sholten@jpmorgan.com	GMAC Mortgage, LLC	Custodial
2167	796672681	JPMORGAN CHASE BANK, N.A.	3rd First National Plaza Chicago, IL 60602	William Sholten 312-732-4600 william.sholten@jpmorgan.com	GMAC Mortgage, LLC	Custodial
2168	796672699	JPMORGAN CHASE BANK, N.A.	3rd First National Plaza Chicago, IL 60602	William Sholten 312-732-4600 william.sholten@jpmorgan.com	GMAC Mortgage, LLC	Custodial
2169	796672707	JPMORGAN CHASE BANK, N.A.	3rd First National Plaza Chicago, IL 60602	William Sholten 312-732-4600 william.sholten@jpmorgan.com	GMAC Mortgage, LLC	Custodial
2170	796672715	JPMORGAN CHASE BANK, N.A.	3rd First National Plaza Chicago, IL 60602	William Sholten 312-732-4600 william.sholten@jpmorgan.com	GMAC Mortgage, LLC	Custodial
2171	796672723	JPMORGAN CHASE BANK, N.A.	3rd First National Plaza Chicago, IL 60602	William Sholten 312-732-4600 william.sholten@jpmorgan.com	GMAC Mortgage, LLC	Custodial
2172	796672731	JPMORGAN CHASE BANK, N.A.	3rd First National Plaza Chicago, IL 60602	William Sholten 312-732-4600 william.sholten@jpmorgan.com	GMAC Mortgage, LLC	Custodial
2173	796672749	JPMORGAN CHASE BANK, N.A.	3rd First National Plaza Chicago, IL 60602	William Sholten 312-732-4600 william.sholten@jpmorgan.com	GMAC Mortgage, LLC	Custodial
2174	796672756	JPMORGAN CHASE BANK, N.A.	3rd First National Plaza Chicago, IL 60602	William Sholten 312-732-4600 william.sholten@jpmorgan.com	GMAC Mortgage, LLC	Custodial
2175	796672764	JPMORGAN CHASE BANK, N.A.	3rd First National Plaza Chicago, IL 60602	William Sholten 312-732-4600 william.sholten@jpmorgan.com	GMAC Mortgage, LLC	Custodial
2176	796672772	JPMORGAN CHASE BANK, N.A.	3rd First National Plaza Chicago, IL 60602	William Sholten 312-732-4600 william.sholten@jpmorgan.com	GMAC Mortgage, LLC	Custodial
2177	796672780	JPMORGAN CHASE BANK, N.A.	3rd First National Plaza Chicago, IL 60602	William Sholten 312-732-4600 william.sholten@jpmorgan.com	GMAC Mortgage, LLC	Custodial
2178	796672798	JPMORGAN CHASE BANK, N.A.	3rd First National Plaza Chicago, IL 60602	William Sholten 312-732-4600 william.sholten@jpmorgan.com	GMAC Mortgage, LLC	Custodial
2179	796672806	JPMORGAN CHASE BANK, N.A.	3rd First National Plaza Chicago, IL 60602	William Sholten 312-732-4600 william.sholten@jpmorgan.com	GMAC Mortgage, LLC	Custodial
2180	796672814	JPMORGAN CHASE BANK, N.A.	3rd First National Plaza Chicago, IL 60602	William Sholten 312-732-4600 william.sholten@jpmorgan.com	GMAC Mortgage, LLC	Custodial
2181	796672822	JPMORGAN CHASE BANK, N.A.	3rd First National Plaza Chicago, IL 60602	William Sholten 312-732-4600 william.sholten@jpmorgan.com	GMAC Mortgage, LLC	Custodial
2182	796672830	JPMORGAN CHASE BANK, N.A.	3rd First National Plaza Chicago, IL 60602	William Sholten 312-732-4600 william.sholten@jpmorgan.com	GMAC Mortgage, LLC	Custodial
2183	796672848	JPMORGAN CHASE BANK, N.A.	3rd First National Plaza Chicago, IL 60602	William Sholten 312-732-4600 william.sholten@jpmorgan.com	GMAC Mortgage, LLC	Custodial
2184	796672855	JPMORGAN CHASE BANK, N.A.	3rd First National Plaza Chicago, IL 60602	William Sholten 312-732-4600 william.sholten@jpmorgan.com	GMAC Mortgage, LLC	Custodial
2185	796672863	JPMORGAN CHASE BANK, N.A.	3rd First National Plaza Chicago, IL 60602	William Sholten 312-732-4600 william.sholten@jpmorgan.com	GMAC Mortgage, LLC	Custodial
2186	796672871	JPMORGAN CHASE BANK, N.A.	3rd First National Plaza Chicago, IL 60602	William Sholten 312-732-4600 william.sholten@jpmorgan.com	GMAC Mortgage, LLC	Custodial
2187	796672889	JPMORGAN CHASE BANK, N.A.	3rd First National Plaza Chicago, IL 60602	William Sholten 312-732-4600 william.sholten@jpmorgan.com	GMAC Mortgage, LLC	Custodial
2188	796672897	JPMORGAN CHASE BANK, N.A.	3rd First National Plaza Chicago, IL 60602	William Sholten 312-732-4600 william.sholten@jpmorgan.com	GMAC Mortgage, LLC	Custodial
2189	796672905	JPMORGAN CHASE BANK, N.A.	3rd First National Plaza Chicago, IL 60602	William Sholten 312-732-4600 william.sholten@jpmorgan.com	GMAC Mortgage, LLC	Custodial
2190	796672913	JPMORGAN CHASE BANK, N.A.	3rd First National Plaza Chicago, IL 60602	William Sholten 312-732-4600 william.sholten@jpmorgan.com	GMAC Mortgage, LLC	Custodial
2191	796672921	JPMORGAN CHASE BANK, N.A.	3rd First National Plaza Chicago, IL 60602	William Sholten 312-732-4600 william.sholten@jpmorgan.com	GMAC Mortgage, LLC	Custodial
2192	796672939	JPMORGAN CHASE BANK, N.A.	3rd First National Plaza Chicago, IL 60602	William Sholten 312-732-4600 william.sholten@jpmorgan.com	GMAC Mortgage, LLC	Custodial
2193	796672947	JPMORGAN CHASE BANK, N.A.	3rd First National Plaza Chicago, IL 60602	William Sholten 312-732-4600 william.sholten@jpmorgan.com	GMAC Mortgage, LLC	Custodial

Privileged and Confidential

Exhibit B - Bank Accounts

Ref #	Account Number	Bank	Address	Contact	Corporate/Company Code	Account Type
2194	796672954	JPMORGAN CHASE BANK, N.A.	3rd First National Plaza Chicago, IL 60602	William Sholten 312-732-4600 william.sholten@jpmorgan.com	GMAC Mortgage, LLC	Custodial
2195	796672962	JPMORGAN CHASE BANK, N.A.	3rd First National Plaza Chicago, IL 60602	William Sholten 312-732-4600 william.sholten@jpmorgan.com	GMAC Mortgage, LLC	Custodial
2196	796672970	JPMORGAN CHASE BANK, N.A.	3rd First National Plaza Chicago, IL 60602	William Sholten 312-732-4600 william.sholten@jpmorgan.com	GMAC Mortgage, LLC	Custodial
2197	796672988	JPMORGAN CHASE BANK, N.A.	3rd First National Plaza Chicago, IL 60602	William Sholten 312-732-4600 william.sholten@jpmorgan.com	GMAC Mortgage, LLC	Custodial
2198	796672996	JPMORGAN CHASE BANK, N.A.	3rd First National Plaza Chicago, IL 60602	William Sholten 312-732-4600 william.sholten@jpmorgan.com	GMAC Mortgage, LLC	Custodial
2199	796673002	JPMORGAN CHASE BANK, N.A.	3rd First National Plaza Chicago, IL 60602	William Sholten 312-732-4600 william.sholten@jpmorgan.com	GMAC Mortgage, LLC	Custodial
2200	796673010	JPMORGAN CHASE BANK, N.A.	3rd First National Plaza Chicago, IL 60602	William Sholten 312-732-4600 william.sholten@jpmorgan.com	GMAC Mortgage, LLC	Custodial
2201	796673028	JPMORGAN CHASE BANK, N.A.	3rd First National Plaza Chicago, IL 60602	William Sholten 312-732-4600 william.sholten@jpmorgan.com	GMAC Mortgage, LLC	Custodial
2202	796673036	JPMORGAN CHASE BANK, N.A.	3rd First National Plaza Chicago, IL 60602	William Sholten 312-732-4600 william.sholten@jpmorgan.com	GMAC Mortgage, LLC	Custodial
2203	796673044	JPMORGAN CHASE BANK, N.A.	3rd First National Plaza Chicago, IL 60602	William Sholten 312-732-4600 william.sholten@jpmorgan.com	GMAC Mortgage, LLC	Custodial
2204	796673051	JPMORGAN CHASE BANK, N.A.	3rd First National Plaza Chicago, IL 60602	William Sholten 312-732-4600 william.sholten@jpmorgan.com	GMAC Mortgage, LLC	Custodial
2205	796673069	JPMORGAN CHASE BANK, N.A.	3rd First National Plaza Chicago, IL 60602	William Sholten 312-732-4600 william.sholten@jpmorgan.com	GMAC Mortgage, LLC	Custodial
2206	796673077	JPMORGAN CHASE BANK, N.A.	3rd First National Plaza Chicago, IL 60602	William Sholten 312-732-4600 william.sholten@jpmorgan.com	GMAC Mortgage, LLC	Custodial
2207	796673085	JPMORGAN CHASE BANK, N.A.	3rd First National Plaza Chicago, IL 60602	William Sholten 312-732-4600 william.sholten@jpmorgan.com	GMAC Mortgage, LLC	Custodial
2208	796673093	JPMORGAN CHASE BANK, N.A.	3rd First National Plaza Chicago, IL 60602	William Sholten 312-732-4600 william.sholten@jpmorgan.com	GMAC Mortgage, LLC	Custodial
2209	796673101	JPMORGAN CHASE BANK, N.A.	3rd First National Plaza Chicago, IL 60602	William Sholten 312-732-4600 william.sholten@jpmorgan.com	GMAC Mortgage, LLC	Custodial
2210	796673119	JPMORGAN CHASE BANK, N.A.	3rd First National Plaza Chicago, IL 60602	William Sholten 312-732-4600 william.sholten@jpmorgan.com	GMAC Mortgage, LLC	Custodial
2211	796673127	JPMORGAN CHASE BANK, N.A.	3rd First National Plaza Chicago, IL 60602	William Sholten 312-732-4600 william.sholten@jpmorgan.com	GMAC Mortgage, LLC	Custodial
2212	796673135	JPMORGAN CHASE BANK, N.A.	3rd First National Plaza Chicago, IL 60602	William Sholten 312-732-4600 william.sholten@jpmorgan.com	GMAC Mortgage, LLC	Custodial
2213	796673143	JPMORGAN CHASE BANK, N.A.	3rd First National Plaza Chicago, IL 60602	William Sholten 312-732-4600 william.sholten@jpmorgan.com	GMAC Mortgage, LLC	Custodial
2214	796673150	JPMORGAN CHASE BANK, N.A.	3rd First National Plaza Chicago, IL 60602	William Sholten 312-732-4600 william.sholten@jpmorgan.com	GMAC Mortgage, LLC	Custodial
2215	796673168	JPMORGAN CHASE BANK, N.A.	3rd First National Plaza Chicago, IL 60602	William Sholten 312-732-4600 william.sholten@jpmorgan.com	GMAC Mortgage, LLC	Custodial
2216	796673176	JPMORGAN CHASE BANK, N.A.	3rd First National Plaza Chicago, IL 60602	William Sholten 312-732-4600 william.sholten@jpmorgan.com	GMAC Mortgage, LLC	Custodial
2217	796673184	JPMORGAN CHASE BANK, N.A.	3rd First National Plaza Chicago, IL 60602	William Sholten 312-732-4600 william.sholten@jpmorgan.com	GMAC Mortgage, LLC	Custodial
2218	796673192	JPMORGAN CHASE BANK, N.A.	3rd First National Plaza Chicago, IL 60602	William Sholten 312-732-4600 william.sholten@jpmorgan.com	GMAC Mortgage, LLC	Custodial
2219	796673200	JPMORGAN CHASE BANK, N.A.	3rd First National Plaza Chicago, IL 60602	William Sholten 312-732-4600 william.sholten@jpmorgan.com	GMAC Mortgage, LLC	Custodial
2220	796673218	JPMORGAN CHASE BANK, N.A.	3rd First National Plaza Chicago, IL 60602	William Sholten 312-732-4600 william.sholten@jpmorgan.com	GMAC Mortgage, LLC	Custodial
2221	796673226	JPMORGAN CHASE BANK, N.A.	3rd First National Plaza Chicago, IL 60602	William Sholten 312-732-4600 william.sholten@jpmorgan.com	GMAC Mortgage, LLC	Custodial
2222	796673234	JPMORGAN CHASE BANK, N.A.	3rd First National Plaza Chicago, IL 60602	William Sholten 312-732-4600 william.sholten@jpmorgan.com	GMAC Mortgage, LLC	Custodial
2223	796673242	JPMORGAN CHASE BANK, N.A.	3rd First National Plaza Chicago, IL 60602	William Sholten 312-732-4600 william.sholten@jpmorgan.com	GMAC Mortgage, LLC	Custodial
2224	796673259	JPMORGAN CHASE BANK, N.A.	3rd First National Plaza Chicago, IL 60602	William Sholten 312-732-4600 william.sholten@jpmorgan.com	GMAC Mortgage, LLC	Custodial
2225	796673267	JPMORGAN CHASE BANK, N.A.	3rd First National Plaza Chicago, IL 60602	William Sholten 312-732-4600 william.sholten@jpmorgan.com	GMAC Mortgage, LLC	Custodial
2226	796673275	JPMORGAN CHASE BANK, N.A.	3rd First National Plaza Chicago, IL 60602	William Sholten 312-732-4600 william.sholten@jpmorgan.com	GMAC Mortgage, LLC	Custodial
2227	796673283	JPMORGAN CHASE BANK, N.A.	3rd First National Plaza Chicago, IL 60602	William Sholten 312-732-4600 william.sholten@jpmorgan.com	GMAC Mortgage, LLC	Custodial
2228	796673291	JPMORGAN CHASE BANK, N.A.	3rd First National Plaza Chicago, IL 60602	William Sholten 312-732-4600 william.sholten@jpmorgan.com	GMAC Mortgage, LLC	Custodial
2229	796673309	JPMORGAN CHASE BANK, N.A.	3rd First National Plaza Chicago, IL 60602	William Sholten 312-732-4600 william.sholten@jpmorgan.com	GMAC Mortgage, LLC	Custodial
2230	796673317	JPMORGAN CHASE BANK, N.A.	3rd First National Plaza Chicago, IL 60602	William Sholten 312-732-4600 william.sholten@jpmorgan.com	GMAC Mortgage, LLC	Custodial
2231	796673325	JPMORGAN CHASE BANK, N.A.	3rd First National Plaza Chicago, IL 60602	William Sholten 312-732-4600 william.sholten@jpmorgan.com	GMAC Mortgage, LLC	Custodial
2232	796673333	JPMORGAN CHASE BANK, N.A.	3rd First National Plaza Chicago, IL 60602	William Sholten 312-732-4600 william.sholten@jpmorgan.com	GMAC Mortgage, LLC	Custodial
2233	796673341	JPMORGAN CHASE BANK, N.A.	3rd First National Plaza Chicago, IL 60602	William Sholten 312-732-4600 william.sholten@jpmorgan.com	GMAC Mortgage, LLC	Custodial
2234	796673358	JPMORGAN CHASE BANK, N.A.	3rd First National Plaza Chicago, IL 60602	William Sholten 312-732-4600 william.sholten@jpmorgan.com	GMAC Mortgage, LLC	Custodial
2235	796673366	JPMORGAN CHASE BANK, N.A.	3rd First National Plaza Chicago, IL 60602	William Sholten 312-732-4600 william.sholten@jpmorgan.com	GMAC Mortgage, LLC	Custodial
2236	796673374	JPMORGAN CHASE BANK, N.A.	3rd First National Plaza Chicago, IL 60602	William Sholten 312-732-4600 william.sholten@jpmorgan.com	GMAC Mortgage, LLC	Custodial

Privileged and Confidential

Exhibit B - Bank Accounts

Ref #	Account Number	Bank	Address	Contact	Corporate/Company Code	Account Type
2237	796673382	JPMORGAN CHASE BANK, N.A.	3rd First National Plaza Chicago, IL 60602	William Sholten 312-732-4600 william.sholten@jpmorgan.com	GMAC Mortgage, LLC	Custodial
2238	796673390	JPMORGAN CHASE BANK, N.A.	3rd First National Plaza Chicago, IL 60602	William Sholten 312-732-4600 william.sholten@jpmorgan.com	GMAC Mortgage, LLC	Custodial
2239	796673408	JPMORGAN CHASE BANK, N.A.	3rd First National Plaza Chicago, IL 60602	William Sholten 312-732-4600 william.sholten@jpmorgan.com	GMAC Mortgage, LLC	Custodial
2240	796673416	JPMORGAN CHASE BANK, N.A.	3rd First National Plaza Chicago, IL 60602	William Sholten 312-732-4600 william.sholten@jpmorgan.com	GMAC Mortgage, LLC	Custodial
2241	796673424	JPMORGAN CHASE BANK, N.A.	3rd First National Plaza Chicago, IL 60602	William Sholten 312-732-4600 william.sholten@jpmorgan.com	GMAC Mortgage, LLC	Custodial
2242	796673432	JPMORGAN CHASE BANK, N.A.	3rd First National Plaza Chicago, IL 60602	William Sholten 312-732-4600 william.sholten@jpmorgan.com	GMAC Mortgage, LLC	Custodial
2243	796673440	JPMORGAN CHASE BANK, N.A.	3rd First National Plaza Chicago, IL 60602	William Sholten 312-732-4600 william.sholten@jpmorgan.com	GMAC Mortgage, LLC	Custodial
2244	796673457	JPMORGAN CHASE BANK, N.A.	3rd First National Plaza Chicago, IL 60602	William Sholten 312-732-4600 william.sholten@jpmorgan.com	GMAC Mortgage, LLC	Custodial
2245	796673465	JPMORGAN CHASE BANK, N.A.	3rd First National Plaza Chicago, IL 60602	William Sholten 312-732-4600 william.sholten@jpmorgan.com	GMAC Mortgage, LLC	Custodial
2246	796673473	JPMORGAN CHASE BANK, N.A.	3rd First National Plaza Chicago, IL 60602	William Sholten 312-732-4600 william.sholten@jpmorgan.com	GMAC Mortgage, LLC	Custodial
2247	796673481	JPMORGAN CHASE BANK, N.A.	3rd First National Plaza Chicago, IL 60602	William Sholten 312-732-4600 william.sholten@jpmorgan.com	GMAC Mortgage, LLC	Custodial
2248	796673499	JPMORGAN CHASE BANK, N.A.	3rd First National Plaza Chicago, IL 60602	William Sholten 312-732-4600 william.sholten@jpmorgan.com	GMAC Mortgage, LLC	Custodial
2249	796673507	JPMORGAN CHASE BANK, N.A.	3rd First National Plaza Chicago, IL 60602	William Sholten 312-732-4600 william.sholten@jpmorgan.com	GMAC Mortgage, LLC	Custodial
2250	796673515	JPMORGAN CHASE BANK, N.A.	3rd First National Plaza Chicago, IL 60602	William Sholten 312-732-4600 william.sholten@jpmorgan.com	GMAC Mortgage, LLC	Custodial
2251	796673523	JPMORGAN CHASE BANK, N.A.	3rd First National Plaza Chicago, IL 60602	William Sholten 312-732-4600 william.sholten@jpmorgan.com	GMAC Mortgage, LLC	Custodial
2252	796673531	JPMORGAN CHASE BANK, N.A.	3rd First National Plaza Chicago, IL 60602	William Sholten 312-732-4600 william.sholten@jpmorgan.com	GMAC Mortgage, LLC	Custodial
2253	796673549	JPMORGAN CHASE BANK, N.A.	3rd First National Plaza Chicago, IL 60602	William Sholten 312-732-4600 william.sholten@jpmorgan.com	GMAC Mortgage, LLC	Custodial
2254	796673556	JPMORGAN CHASE BANK, N.A.	3rd First National Plaza Chicago, IL 60602	William Sholten 312-732-4600 william.sholten@jpmorgan.com	GMAC Mortgage, LLC	Custodial
2255	796673564	JPMORGAN CHASE BANK, N.A.	3rd First National Plaza Chicago, IL 60602	William Sholten 312-732-4600 william.sholten@jpmorgan.com	GMAC Mortgage, LLC	Custodial
2256	796673572	JPMORGAN CHASE BANK, N.A.	3rd First National Plaza Chicago, IL 60602	William Sholten 312-732-4600 william.sholten@jpmorgan.com	GMAC Mortgage, LLC	Custodial
2257	796673580	JPMORGAN CHASE BANK, N.A.	3rd First National Plaza Chicago, IL 60602	William Sholten 312-732-4600 william.sholten@jpmorgan.com	GMAC Mortgage, LLC	Custodial
2258	796673598	JPMORGAN CHASE BANK, N.A.	3rd First National Plaza Chicago, IL 60602	William Sholten 312-732-4600 william.sholten@jpmorgan.com	GMAC Mortgage, LLC	Custodial
2259	796673606	JPMORGAN CHASE BANK, N.A.	3rd First National Plaza Chicago, IL 60602	William Sholten 312-732-4600 william.sholten@jpmorgan.com	GMAC Mortgage, LLC	Custodial
2260	796673614	JPMORGAN CHASE BANK, N.A.	3rd First National Plaza Chicago, IL 60602	William Sholten 312-732-4600 william.sholten@jpmorgan.com	GMAC Mortgage, LLC	Custodial
2261	796673622	JPMORGAN CHASE BANK, N.A.	3rd First National Plaza Chicago, IL 60602	William Sholten 312-732-4600 william.sholten@jpmorgan.com	GMAC Mortgage, LLC	Custodial
2262	796673630	JPMORGAN CHASE BANK, N.A.	3rd First National Plaza Chicago, IL 60602	William Sholten 312-732-4600 william.sholten@jpmorgan.com	GMAC Mortgage, LLC	Custodial
2263	796673648	JPMORGAN CHASE BANK, N.A.	3rd First National Plaza Chicago, IL 60602	William Sholten 312-732-4600 william.sholten@jpmorgan.com	GMAC Mortgage, LLC	Custodial
2264	796673655	JPMORGAN CHASE BANK, N.A.	3rd First National Plaza Chicago, IL 60602	William Sholten 312-732-4600 william.sholten@jpmorgan.com	GMAC Mortgage, LLC	Custodial
2265	796673663	JPMORGAN CHASE BANK, N.A.	3rd First National Plaza Chicago, IL 60602	William Sholten 312-732-4600 william.sholten@jpmorgan.com	GMAC Mortgage, LLC	Custodial
2266	796673671	JPMORGAN CHASE BANK, N.A.	3rd First National Plaza Chicago, IL 60602	William Sholten 312-732-4600 william.sholten@jpmorgan.com	GMAC Mortgage, LLC	Custodial
2267	796673689	JPMORGAN CHASE BANK, N.A.	3rd First National Plaza Chicago, IL 60602	William Sholten 312-732-4600 william.sholten@jpmorgan.com	GMAC Mortgage, LLC	Custodial
2268	796673697	JPMORGAN CHASE BANK, N.A.	3rd First National Plaza Chicago, IL 60602	William Sholten 312-732-4600 william.sholten@jpmorgan.com	GMAC Mortgage, LLC	Custodial
2269	796673705	JPMORGAN CHASE BANK, N.A.	3rd First National Plaza Chicago, IL 60602	William Sholten 312-732-4600 william.sholten@jpmorgan.com	GMAC Mortgage, LLC	Custodial
2270	796673713	JPMORGAN CHASE BANK, N.A.	3rd First National Plaza Chicago, IL 60602	William Sholten 312-732-4600 william.sholten@jpmorgan.com	GMAC Mortgage, LLC	Custodial
2271	796673721	JPMORGAN CHASE BANK, N.A.	3rd First National Plaza Chicago, IL 60602	William Sholten 312-732-4600 william.sholten@jpmorgan.com	GMAC Mortgage, LLC	Custodial
2272	796673739	JPMORGAN CHASE BANK, N.A.	3rd First National Plaza Chicago, IL 60602	William Sholten 312-732-4600 william.sholten@jpmorgan.com	GMAC Mortgage, LLC	Custodial
2273	796673747	JPMORGAN CHASE BANK, N.A.	3rd First National Plaza Chicago, IL 60602	William Sholten 312-732-4600 william.sholten@jpmorgan.com	GMAC Mortgage, LLC	Custodial
2274	796673754	JPMORGAN CHASE BANK, N.A.	3rd First National Plaza Chicago, IL 60602	William Sholten 312-732-4600 william.sholten@jpmorgan.com	GMAC Mortgage, LLC	Custodial
2275	796673762	JPMORGAN CHASE BANK, N.A.	3rd First National Plaza Chicago, IL 60602	William Sholten 312-732-4600 william.sholten@jpmorgan.com	GMAC Mortgage, LLC	Custodial
2276	796673770	JPMORGAN CHASE BANK, N.A.	3rd First National Plaza Chicago, IL 60602	William Sholten 312-732-4600 william.sholten@jpmorgan.com	GMAC Mortgage, LLC	Custodial
2277	796673788	JPMORGAN CHASE BANK, N.A.	3rd First National Plaza Chicago, IL 60602	William Sholten 312-732-4600 william.sholten@jpmorgan.com	GMAC Mortgage, LLC	Custodial
2278	796673796	JPMORGAN CHASE BANK, N.A.	3rd First National Plaza Chicago, IL 60602	William Sholten 312-732-4600 william.sholten@jpmorgan.com	GMAC Mortgage, LLC	Custodial
2279	796673804	JPMORGAN CHASE BANK, N.A.	3rd First National Plaza Chicago, IL 60602	William Sholten 312-732-4600 william.sholten@jpmorgan.com	GMAC Mortgage, LLC	Custodial

Privileged and Confidential

Exhibit B - Bank Accounts

Ref #	Account Number	Bank	Address	Contact	Corporate/Company Code	Account Type
2280	796673812	JPMORGAN CHASE BANK, N.A.	3rd First National Plaza Chicago, IL 60602	William Sholten 312-732-4600 william.sholten@jpmorgan.com	GMAC Mortgage, LLC	Custodial
2281	796673820	JPMORGAN CHASE BANK, N.A.	3rd First National Plaza Chicago, IL 60602	William Sholten 312-732-4600 william.sholten@jpmorgan.com	GMAC Mortgage, LLC	Custodial
2282	796673838	JPMORGAN CHASE BANK, N.A.	3rd First National Plaza Chicago, IL 60602	William Sholten 312-732-4600 william.sholten@jpmorgan.com	GMAC Mortgage, LLC	Custodial
2283	796673846	JPMORGAN CHASE BANK, N.A.	3rd First National Plaza Chicago, IL 60602	William Sholten 312-732-4600 william.sholten@jpmorgan.com	GMAC Mortgage, LLC	Custodial
2284	796673853	JPMORGAN CHASE BANK, N.A.	3rd First National Plaza Chicago, IL 60602	William Sholten 312-732-4600 william.sholten@jpmorgan.com	GMAC Mortgage, LLC	Custodial
2285	796673861	JPMORGAN CHASE BANK, N.A.	3rd First National Plaza Chicago, IL 60602	William Sholten 312-732-4600 william.sholten@jpmorgan.com	GMAC Mortgage, LLC	Custodial
2286	796673879	JPMORGAN CHASE BANK, N.A.	3rd First National Plaza Chicago, IL 60602	William Sholten 312-732-4600 william.sholten@jpmorgan.com	GMAC Mortgage, LLC	Custodial
2287	796673887	JPMORGAN CHASE BANK, N.A.	3rd First National Plaza Chicago, IL 60602	William Sholten 312-732-4600 william.sholten@jpmorgan.com	GMAC Mortgage, LLC	Custodial
2288	796673895	JPMORGAN CHASE BANK, N.A.	3rd First National Plaza Chicago, IL 60602	William Sholten 312-732-4600 william.sholten@jpmorgan.com	GMAC Mortgage, LLC	Custodial
2289	796673903	JPMORGAN CHASE BANK, N.A.	3rd First National Plaza Chicago, IL 60602	William Sholten 312-732-4600 william.sholten@jpmorgan.com	GMAC Mortgage, LLC	Custodial
2290	796673911	JPMORGAN CHASE BANK, N.A.	3rd First National Plaza Chicago, IL 60602	William Sholten 312-732-4600 william.sholten@jpmorgan.com	GMAC Mortgage, LLC	Custodial
2291	796673929	JPMORGAN CHASE BANK, N.A.	3rd First National Plaza Chicago, IL 60602	William Sholten 312-732-4600 william.sholten@jpmorgan.com	GMAC Mortgage, LLC	Custodial
2292	796673937	JPMORGAN CHASE BANK, N.A.	3rd First National Plaza Chicago, IL 60602	William Sholten 312-732-4600 william.sholten@jpmorgan.com	GMAC Mortgage, LLC	Custodial
2293	796673945	JPMORGAN CHASE BANK, N.A.	3rd First National Plaza Chicago, IL 60602	William Sholten 312-732-4600 william.sholten@jpmorgan.com	GMAC Mortgage, LLC	Custodial
2294	796673952	JPMORGAN CHASE BANK, N.A.	3rd First National Plaza Chicago, IL 60602	William Sholten 312-732-4600 william.sholten@jpmorgan.com	GMAC Mortgage, LLC	Custodial
2295	796673960	JPMORGAN CHASE BANK, N.A.	3rd First National Plaza Chicago, IL 60602	William Sholten 312-732-4600 william.sholten@jpmorgan.com	GMAC Mortgage, LLC	Custodial
2296	796673978	JPMORGAN CHASE BANK, N.A.	3rd First National Plaza Chicago, IL 60602	William Sholten 312-732-4600 william.sholten@jpmorgan.com	GMAC Mortgage, LLC	Custodial
2297	796673986	JPMORGAN CHASE BANK, N.A.	3rd First National Plaza Chicago, IL 60602	William Sholten 312-732-4600 william.sholten@jpmorgan.com	GMAC Mortgage, LLC	Custodial
2298	796673994	JPMORGAN CHASE BANK, N.A.	3rd First National Plaza Chicago, IL 60602	William Sholten 312-732-4600 william.sholten@jpmorgan.com	GMAC Mortgage, LLC	Custodial
2299	796674000	JPMORGAN CHASE BANK, N.A.	3rd First National Plaza Chicago, IL 60602	William Sholten 312-732-4600 william.sholten@jpmorgan.com	GMAC Mortgage, LLC	Custodial
2300	796674018	JPMORGAN CHASE BANK, N.A.	3rd First National Plaza Chicago, IL 60602	William Sholten 312-732-4600 william.sholten@jpmorgan.com	GMAC Mortgage, LLC	Custodial
2301	796674026	JPMORGAN CHASE BANK, N.A.	3rd First National Plaza Chicago, IL 60602	William Sholten 312-732-4600 william.sholten@jpmorgan.com	GMAC Mortgage, LLC	Custodial
2302	796674034	JPMORGAN CHASE BANK, N.A.	3rd First National Plaza Chicago, IL 60602	William Sholten 312-732-4600 william.sholten@jpmorgan.com	GMAC Mortgage, LLC	Custodial
2303	796674042	JPMORGAN CHASE BANK, N.A.	3rd First National Plaza Chicago, IL 60602	William Sholten 312-732-4600 william.sholten@jpmorgan.com	GMAC Mortgage, LLC	Custodial
2304	796674059	JPMORGAN CHASE BANK, N.A.	3rd First National Plaza Chicago, IL 60602	William Sholten 312-732-4600 william.sholten@jpmorgan.com	GMAC Mortgage, LLC	Custodial
2305	796674067	JPMORGAN CHASE BANK, N.A.	3rd First National Plaza Chicago, IL 60602	William Sholten 312-732-4600 william.sholten@jpmorgan.com	GMAC Mortgage, LLC	Custodial
2306	796674075	JPMORGAN CHASE BANK, N.A.	3rd First National Plaza Chicago, IL 60602	William Sholten 312-732-4600 william.sholten@jpmorgan.com	GMAC Mortgage, LLC	Custodial
2307	796674083	JPMORGAN CHASE BANK, N.A.	3rd First National Plaza Chicago, IL 60602	William Sholten 312-732-4600 william.sholten@jpmorgan.com	GMAC Mortgage, LLC	Custodial
2308	796674091	JPMORGAN CHASE BANK, N.A.	3rd First National Plaza Chicago, IL 60602	William Sholten 312-732-4600 william.sholten@jpmorgan.com	GMAC Mortgage, LLC	Custodial
2309	796674109	JPMORGAN CHASE BANK, N.A.	3rd First National Plaza Chicago, IL 60602	William Sholten 312-732-4600 william.sholten@jpmorgan.com	GMAC Mortgage, LLC	Custodial
2310	796674117	JPMORGAN CHASE BANK, N.A.	3rd First National Plaza Chicago, IL 60602	William Sholten 312-732-4600 william.sholten@jpmorgan.com	GMAC Mortgage, LLC	Custodial
2311	796674125	JPMORGAN CHASE BANK, N.A.	3rd First National Plaza Chicago, IL 60602	William Sholten 312-732-4600 william.sholten@jpmorgan.com	GMAC Mortgage, LLC	Custodial
2312	796674133	JPMORGAN CHASE BANK, N.A.	3rd First National Plaza Chicago, IL 60602	William Sholten 312-732-4600 william.sholten@jpmorgan.com	GMAC Mortgage, LLC	Custodial
2313	796674141	JPMORGAN CHASE BANK, N.A.	3rd First National Plaza Chicago, IL 60602	William Sholten 312-732-4600 william.sholten@jpmorgan.com	GMAC Mortgage, LLC	Custodial
2314	796674158	JPMORGAN CHASE BANK, N.A.	3rd First National Plaza Chicago, IL 60602	William Sholten 312-732-4600 william.sholten@jpmorgan.com	GMAC Mortgage, LLC	Custodial
2315	796674166	JPMORGAN CHASE BANK, N.A.	3rd First National Plaza Chicago, IL 60602	William Sholten 312-732-4600 william.sholten@jpmorgan.com	GMAC Mortgage, LLC	Custodial
2316	796674174	JPMORGAN CHASE BANK, N.A.	3rd First National Plaza Chicago, IL 60602	William Sholten 312-732-4600 william.sholten@jpmorgan.com	GMAC Mortgage, LLC	Custodial
2317	796674182	JPMORGAN CHASE BANK, N.A.	3rd First National Plaza Chicago, IL 60602	William Sholten 312-732-4600 william.sholten@jpmorgan.com	GMAC Mortgage, LLC	Custodial
2318	796674190	JPMORGAN CHASE BANK, N.A.	3rd First National Plaza Chicago, IL 60602	William Sholten 312-732-4600 william.sholten@jpmorgan.com	GMAC Mortgage, LLC	Custodial
2319	796674208	JPMORGAN CHASE BANK, N.A.	3rd First National Plaza Chicago, IL 60602	William Sholten 312-732-4600 william.sholten@jpmorgan.com	GMAC Mortgage, LLC	Custodial
2320	796674216	JPMORGAN CHASE BANK, N.A.	3rd First National Plaza Chicago, IL 60602	William Sholten 312-732-4600 william.sholten@jpmorgan.com	GMAC Mortgage, LLC	Custodial
2321	796674224	JPMORGAN CHASE BANK, N.A.	3rd First National Plaza Chicago, IL 60602	William Sholten 312-732-4600 william.sholten@jpmorgan.com	GMAC Mortgage, LLC	Custodial
2322	796674232	JPMORGAN CHASE BANK, N.A.	3rd First National Plaza Chicago, IL 60602	William Sholten 312-732-4600 william.sholten@jpmorgan.com	GMAC Mortgage, LLC	Custodial

Privileged and Confidential

Exhibit B - Bank Accounts

Ref #	Account Number	Bank	Address	Contact	Corporate/Company Code	Account Type
2323	796674240	JPMORGAN CHASE BANK, N.A.	3rd First National Plaza Chicago, IL 60602	William Sholten 312-732-4600 william.sholten@jpmorgan.com	GMAC Mortgage, LLC	Custodial
2324	796674257	JPMORGAN CHASE BANK, N.A.	3rd First National Plaza Chicago, IL 60602	William Sholten 312-732-4600 william.sholten@jpmorgan.com	GMAC Mortgage, LLC	Custodial
2325	796674265	JPMORGAN CHASE BANK, N.A.	3rd First National Plaza Chicago, IL 60602	William Sholten 312-732-4600 william.sholten@jpmorgan.com	GMAC Mortgage, LLC	Custodial
2326	796674273	JPMORGAN CHASE BANK, N.A.	3rd First National Plaza Chicago, IL 60602	William Sholten 312-732-4600 william.sholten@jpmorgan.com	GMAC Mortgage, LLC	Custodial
2327	796674281	JPMORGAN CHASE BANK, N.A.	3rd First National Plaza Chicago, IL 60602	William Sholten 312-732-4600 william.sholten@jpmorgan.com	GMAC Mortgage, LLC	Custodial
2328	796674299	JPMORGAN CHASE BANK, N.A.	3rd First National Plaza Chicago, IL 60602	William Sholten 312-732-4600 william.sholten@jpmorgan.com	GMAC Mortgage, LLC	Custodial
2329	796674307	JPMORGAN CHASE BANK, N.A.	3rd First National Plaza Chicago, IL 60602	William Sholten 312-732-4600 william.sholten@jpmorgan.com	GMAC Mortgage, LLC	Custodial
2330	796674315	JPMORGAN CHASE BANK, N.A.	3rd First National Plaza Chicago, IL 60602	William Sholten 312-732-4600 william.sholten@jpmorgan.com	GMAC Mortgage, LLC	Custodial
2331	796674323	JPMORGAN CHASE BANK, N.A.	3rd First National Plaza Chicago, IL 60602	William Sholten 312-732-4600 william.sholten@jpmorgan.com	GMAC Mortgage, LLC	Custodial
2332	796674331	JPMORGAN CHASE BANK, N.A.	3rd First National Plaza Chicago, IL 60602	William Sholten 312-732-4600 william.sholten@jpmorgan.com	GMAC Mortgage, LLC	Custodial
2333	796674349	JPMORGAN CHASE BANK, N.A.	3rd First National Plaza Chicago, IL 60602	William Sholten 312-732-4600 william.sholten@jpmorgan.com	GMAC Mortgage, LLC	Custodial
2334	796674356	JPMORGAN CHASE BANK, N.A.	3rd First National Plaza Chicago, IL 60602	William Sholten 312-732-4600 william.sholten@jpmorgan.com	GMAC Mortgage, LLC	Custodial
2335	796674364	JPMORGAN CHASE BANK, N.A.	3rd First National Plaza Chicago, IL 60602	William Sholten 312-732-4600 william.sholten@jpmorgan.com	GMAC Mortgage, LLC	Custodial
2336	796674372	JPMORGAN CHASE BANK, N.A.	3rd First National Plaza Chicago, IL 60602	William Sholten 312-732-4600 william.sholten@jpmorgan.com	GMAC Mortgage, LLC	Custodial
2337	796674380	JPMORGAN CHASE BANK, N.A.	3rd First National Plaza Chicago, IL 60602	William Sholten 312-732-4600 william.sholten@jpmorgan.com	GMAC Mortgage, LLC	Custodial
2338	796674398	JPMORGAN CHASE BANK, N.A.	3rd First National Plaza Chicago, IL 60602	William Sholten 312-732-4600 william.sholten@jpmorgan.com	GMAC Mortgage, LLC	Custodial
2339	796674406	JPMORGAN CHASE BANK, N.A.	3rd First National Plaza Chicago, IL 60602	William Sholten 312-732-4600 william.sholten@jpmorgan.com	GMAC Mortgage, LLC	Custodial
2340	796674414	JPMORGAN CHASE BANK, N.A.	3rd First National Plaza Chicago, IL 60602	William Sholten 312-732-4600 william.sholten@jpmorgan.com	GMAC Mortgage, LLC	Custodial
2341	796674422	JPMORGAN CHASE BANK, N.A.	3rd First National Plaza Chicago, IL 60602	William Sholten 312-732-4600 william.sholten@jpmorgan.com	GMAC Mortgage, LLC	Custodial
2342	796674430	JPMORGAN CHASE BANK, N.A.	3rd First National Plaza Chicago, IL 60602	William Sholten 312-732-4600 william.sholten@jpmorgan.com	GMAC Mortgage, LLC	Custodial
2343	796674448	JPMORGAN CHASE BANK, N.A.	3rd First National Plaza Chicago, IL 60602	William Sholten 312-732-4600 william.sholten@jpmorgan.com	GMAC Mortgage, LLC	Custodial
2344	796674455	JPMORGAN CHASE BANK, N.A.	3rd First National Plaza Chicago, IL 60602	William Sholten 312-732-4600 william.sholten@jpmorgan.com	GMAC Mortgage, LLC	Custodial
2345	796674463	JPMORGAN CHASE BANK, N.A.	3rd First National Plaza Chicago, IL 60602	William Sholten 312-732-4600 william.sholten@jpmorgan.com	GMAC Mortgage, LLC	Custodial
2346	796674471	JPMORGAN CHASE BANK, N.A.	3rd First National Plaza Chicago, IL 60602	William Sholten 312-732-4600 william.sholten@jpmorgan.com	GMAC Mortgage, LLC	Custodial
2347	796674489	JPMORGAN CHASE BANK, N.A.	3rd First National Plaza Chicago, IL 60602	William Sholten 312-732-4600 william.sholten@jpmorgan.com	GMAC Mortgage, LLC	Custodial
2348	796674497	JPMORGAN CHASE BANK, N.A.	3rd First National Plaza Chicago, IL 60602	William Sholten 312-732-4600 william.sholten@jpmorgan.com	GMAC Mortgage, LLC	Custodial
2349	796674505	JPMORGAN CHASE BANK, N.A.	3rd First National Plaza Chicago, IL 60602	William Sholten 312-732-4600 william.sholten@jpmorgan.com	GMAC Mortgage, LLC	Custodial
2350	796674513	JPMORGAN CHASE BANK, N.A.	3rd First National Plaza Chicago, IL 60602	William Sholten 312-732-4600 william.sholten@jpmorgan.com	GMAC Mortgage, LLC	Custodial
2351	796674521	JPMORGAN CHASE BANK, N.A.	3rd First National Plaza Chicago, IL 60602	William Sholten 312-732-4600 william.sholten@jpmorgan.com	GMAC Mortgage, LLC	Custodial
2352	796674539	JPMORGAN CHASE BANK, N.A.	3rd First National Plaza Chicago, IL 60602	William Sholten 312-732-4600 william.sholten@jpmorgan.com	GMAC Mortgage, LLC	Custodial
2353	796674547	JPMORGAN CHASE BANK, N.A.	3rd First National Plaza Chicago, IL 60602	William Sholten 312-732-4600 william.sholten@jpmorgan.com	GMAC Mortgage, LLC	Custodial
2354	796674554	JPMORGAN CHASE BANK, N.A.	3rd First National Plaza Chicago, IL 60602	William Sholten 312-732-4600 william.sholten@jpmorgan.com	GMAC Mortgage, LLC	Custodial
2355	796674562	JPMORGAN CHASE BANK, N.A.	3rd First National Plaza Chicago, IL 60602	William Sholten 312-732-4600 william.sholten@jpmorgan.com	GMAC Mortgage, LLC	Custodial
2356	796674570	JPMORGAN CHASE BANK, N.A.	3rd First National Plaza Chicago, IL 60602	William Sholten 312-732-4600 william.sholten@jpmorgan.com	GMAC Mortgage, LLC	Custodial
2357	796674588	JPMORGAN CHASE BANK, N.A.	3rd First National Plaza Chicago, IL 60602	William Sholten 312-732-4600 william.sholten@jpmorgan.com	GMAC Mortgage, LLC	Custodial
2358	796674596	JPMORGAN CHASE BANK, N.A.	3rd First National Plaza Chicago, IL 60602	William Sholten 312-732-4600 william.sholten@jpmorgan.com	GMAC Mortgage, LLC	Custodial
2359	796674604	JPMORGAN CHASE BANK, N.A.	3rd First National Plaza Chicago, IL 60602	William Sholten 312-732-4600 william.sholten@jpmorgan.com	GMAC Mortgage, LLC	Custodial
2360	796674612	JPMORGAN CHASE BANK, N.A.	3rd First National Plaza Chicago, IL 60602	William Sholten 312-732-4600 william.sholten@jpmorgan.com	GMAC Mortgage, LLC	Custodial
2361	796674620	JPMORGAN CHASE BANK, N.A.	3rd First National Plaza Chicago, IL 60602	William Sholten 312-732-4600 william.sholten@jpmorgan.com	GMAC Mortgage, LLC	Custodial
2362	796674638	JPMORGAN CHASE BANK, N.A.	3rd First National Plaza Chicago, IL 60602	William Sholten 312-732-4600 william.sholten@jpmorgan.com	GMAC Mortgage, LLC	Custodial
2363	796674646	JPMORGAN CHASE BANK, N.A.	3rd First National Plaza Chicago, IL 60602	William Sholten 312-732-4600 william.sholten@jpmorgan.com	GMAC Mortgage, LLC	Custodial
2364	796674653	JPMORGAN CHASE BANK, N.A.	3rd First National Plaza Chicago, IL 60602	William Sholten 312-732-4600 william.sholten@jpmorgan.com	GMAC Mortgage, LLC	Custodial
2365	796674661	JPMORGAN CHASE BANK, N.A.	3rd First National Plaza Chicago, IL 60602	William Sholten 312-732-4600 william.sholten@jpmorgan.com	GMAC Mortgage, LLC	Custodial

Privileged and Confidential

Exhibit B - Bank Accounts

Ref #	Account Number	Bank	Address	Contact	Corporate/Company Code	Account Type
2366	796674679	JPMORGAN CHASE BANK, N.A.	3rd First National Plaza Chicago, IL 60602	William Sholten 312-732-4600 william.sholten@jpmorgan.com	GMAC Mortgage, LLC	Custodial
2367	796674687	JPMORGAN CHASE BANK, N.A.	3rd First National Plaza Chicago, IL 60602	William Sholten 312-732-4600 william.sholten@jpmorgan.com	GMAC Mortgage, LLC	Custodial
2368	796674695	JPMORGAN CHASE BANK, N.A.	3rd First National Plaza Chicago, IL 60602	William Sholten 312-732-4600 william.sholten@jpmorgan.com	GMAC Mortgage, LLC	Custodial
2369	796674703	JPMORGAN CHASE BANK, N.A.	3rd First National Plaza Chicago, IL 60602	William Sholten 312-732-4600 william.sholten@jpmorgan.com	GMAC Mortgage, LLC	Custodial
2370	796674711	JPMORGAN CHASE BANK, N.A.	3rd First National Plaza Chicago, IL 60602	William Sholten 312-732-4600 william.sholten@jpmorgan.com	GMAC Mortgage, LLC	Custodial
2371	796674729	JPMORGAN CHASE BANK, N.A.	3rd First National Plaza Chicago, IL 60602	William Sholten 312-732-4600 william.sholten@jpmorgan.com	GMAC Mortgage, LLC	Custodial
2372	796674737	JPMORGAN CHASE BANK, N.A.	3rd First National Plaza Chicago, IL 60602	William Sholten 312-732-4600 william.sholten@jpmorgan.com	GMAC Mortgage, LLC	Custodial
2373	796674745	JPMORGAN CHASE BANK, N.A.	3rd First National Plaza Chicago, IL 60602	William Sholten 312-732-4600 william.sholten@jpmorgan.com	GMAC Mortgage, LLC	Custodial
2374	796674752	JPMORGAN CHASE BANK, N.A.	3rd First National Plaza Chicago, IL 60602	William Sholten 312-732-4600 william.sholten@jpmorgan.com	GMAC Mortgage, LLC	Custodial
2375	796674760	JPMORGAN CHASE BANK, N.A.	3rd First National Plaza Chicago, IL 60602	William Sholten 312-732-4600 william.sholten@jpmorgan.com	GMAC Mortgage, LLC	Custodial
2376	796674778	JPMORGAN CHASE BANK, N.A.	3rd First National Plaza Chicago, IL 60602	William Sholten 312-732-4600 william.sholten@jpmorgan.com	GMAC Mortgage, LLC	Custodial
2377	796674786	JPMORGAN CHASE BANK, N.A.	3rd First National Plaza Chicago, IL 60602	William Sholten 312-732-4600 william.sholten@jpmorgan.com	GMAC Mortgage, LLC	Custodial
2378	796674794	JPMORGAN CHASE BANK, N.A.	3rd First National Plaza Chicago, IL 60602	William Sholten 312-732-4600 william.sholten@jpmorgan.com	GMAC Mortgage, LLC	Custodial
2379	796674802	JPMORGAN CHASE BANK, N.A.	3rd First National Plaza Chicago, IL 60602	William Sholten 312-732-4600 william.sholten@jpmorgan.com	GMAC Mortgage, LLC	Custodial
2380	796674810	JPMORGAN CHASE BANK, N.A.	3rd First National Plaza Chicago, IL 60602	William Sholten 312-732-4600 william.sholten@jpmorgan.com	GMAC Mortgage, LLC	Custodial
2381	796674828	JPMORGAN CHASE BANK, N.A.	3rd First National Plaza Chicago, IL 60602	William Sholten 312-732-4600 william.sholten@jpmorgan.com	GMAC Mortgage, LLC	Custodial
2382	796674836	JPMORGAN CHASE BANK, N.A.	3rd First National Plaza Chicago, IL 60602	William Sholten 312-732-4600 william.sholten@jpmorgan.com	GMAC Mortgage, LLC	Custodial
2383	796674844	JPMORGAN CHASE BANK, N.A.	3rd First National Plaza Chicago, IL 60602	William Sholten 312-732-4600 william.sholten@jpmorgan.com	GMAC Mortgage, LLC	Custodial
2384	796674851	JPMORGAN CHASE BANK, N.A.	3rd First National Plaza Chicago, IL 60602	William Sholten 312-732-4600 william.sholten@jpmorgan.com	GMAC Mortgage, LLC	Custodial
2385	796674869	JPMORGAN CHASE BANK, N.A.	3rd First National Plaza Chicago, IL 60602	William Sholten 312-732-4600 william.sholten@jpmorgan.com	GMAC Mortgage, LLC	Custodial
2386	796674877	JPMORGAN CHASE BANK, N.A.	3rd First National Plaza Chicago, IL 60602	William Sholten 312-732-4600 william.sholten@jpmorgan.com	GMAC Mortgage, LLC	Custodial
2387	796674885	JPMORGAN CHASE BANK, N.A.	3rd First National Plaza Chicago, IL 60602	William Sholten 312-732-4600 william.sholten@jpmorgan.com	GMAC Mortgage, LLC	Custodial
2388	796674893	JPMORGAN CHASE BANK, N.A.	3rd First National Plaza Chicago, IL 60602	William Sholten 312-732-4600 william.sholten@jpmorgan.com	GMAC Mortgage, LLC	Custodial
2389	796674901	JPMORGAN CHASE BANK, N.A.	3rd First National Plaza Chicago, IL 60602	William Sholten 312-732-4600 william.sholten@jpmorgan.com	GMAC Mortgage, LLC	Custodial
2390	796674919	JPMORGAN CHASE BANK, N.A.	3rd First National Plaza Chicago, IL 60602	William Sholten 312-732-4600 william.sholten@jpmorgan.com	GMAC Mortgage, LLC	Custodial
2391	796674927	JPMORGAN CHASE BANK, N.A.	3rd First National Plaza Chicago, IL 60602	William Sholten 312-732-4600 william.sholten@jpmorgan.com	GMAC Mortgage, LLC	Custodial
2392	796674935	JPMORGAN CHASE BANK, N.A.	3rd First National Plaza Chicago, IL 60602	William Sholten 312-732-4600 william.sholten@jpmorgan.com	GMAC Mortgage, LLC	Custodial
2393	796674943	JPMORGAN CHASE BANK, N.A.	3rd First National Plaza Chicago, IL 60602	William Sholten 312-732-4600 william.sholten@jpmorgan.com	GMAC Mortgage, LLC	Custodial
2394	796674950	JPMORGAN CHASE BANK, N.A.	3rd First National Plaza Chicago, IL 60602	William Sholten 312-732-4600 william.sholten@jpmorgan.com	GMAC Mortgage, LLC	Custodial
2395	796674968	JPMORGAN CHASE BANK, N.A.	3rd First National Plaza Chicago, IL 60602	William Sholten 312-732-4600 william.sholten@jpmorgan.com	GMAC Mortgage, LLC	Custodial
2396	796674976	JPMORGAN CHASE BANK, N.A.	3rd First National Plaza Chicago, IL 60602	William Sholten 312-732-4600 william.sholten@jpmorgan.com	GMAC Mortgage, LLC	Custodial
2397	796674984	JPMORGAN CHASE BANK, N.A.	3rd First National Plaza Chicago, IL 60602	William Sholten 312-732-4600 william.sholten@jpmorgan.com	GMAC Mortgage, LLC	Custodial
2398	796674992	JPMORGAN CHASE BANK, N.A.	3rd First National Plaza Chicago, IL 60602	William Sholten 312-732-4600 william.sholten@jpmorgan.com	GMAC Mortgage, LLC	Custodial
2399	796675007	JPMORGAN CHASE BANK, N.A.	3rd First National Plaza Chicago, IL 60602	William Sholten 312-732-4600 william.sholten@jpmorgan.com	GMAC Mortgage, LLC	Custodial
2400	796675015	JPMORGAN CHASE BANK, N.A.	3rd First National Plaza Chicago, IL 60602	William Sholten 312-732-4600 william.sholten@jpmorgan.com	GMAC Mortgage, LLC	Custodial
2401	796675023	JPMORGAN CHASE BANK, N.A.	3rd First National Plaza Chicago, IL 60602	William Sholten 312-732-4600 william.sholten@jpmorgan.com	GMAC Mortgage, LLC	Custodial
2402	796675031	JPMORGAN CHASE BANK, N.A.	3rd First National Plaza Chicago, IL 60602	William Sholten 312-732-4600 william.sholten@jpmorgan.com	GMAC Mortgage, LLC	Custodial
2403	796675049	JPMORGAN CHASE BANK, N.A.	3rd First National Plaza Chicago, IL 60602	William Sholten 312-732-4600 william.sholten@jpmorgan.com	GMAC Mortgage, LLC	Custodial
2404	796675056	JPMORGAN CHASE BANK, N.A.	3rd First National Plaza Chicago, IL 60602	William Sholten 312-732-4600 william.sholten@jpmorgan.com	GMAC Mortgage, LLC	Custodial
2405	796675064	JPMORGAN CHASE BANK, N.A.	3rd First National Plaza Chicago, IL 60602	William Sholten 312-732-4600 william.sholten@jpmorgan.com	GMAC Mortgage, LLC	Custodial
2406	796675072	JPMORGAN CHASE BANK, N.A.	3rd First National Plaza Chicago, IL 60602	William Sholten 312-732-4600 william.sholten@jpmorgan.com	GMAC Mortgage, LLC	Custodial
2407	796675080	JPMORGAN CHASE BANK, N.A.	3rd First National Plaza Chicago, IL 60602	William Sholten 312-732-4600 william.sholten@jpmorgan.com	GMAC Mortgage, LLC	Custodial
2408	796675098	JPMORGAN CHASE BANK, N.A.	3rd First National Plaza Chicago, IL 60602	William Sholten 312-732-4600 william.sholten@jpmorgan.com	GMAC Mortgage, LLC	Custodial

Privileged and Confidential

Exhibit B - Bank Accounts

Ref #	Account Number	Bank	Address	Contact	Corporate/Company Code	Account Type
2409	796675106	JPMORGAN CHASE BANK, N.A.	3rd First National Plaza Chicago, IL 60602	William Sholten 312-732-4600 william.sholten@jpmorgan.com	GMAC Mortgage, LLC	Custodial
2410	796675114	JPMORGAN CHASE BANK, N.A.	3rd First National Plaza Chicago, IL 60602	William Sholten 312-732-4600 william.sholten@jpmorgan.com	GMAC Mortgage, LLC	Custodial
2411	796675122	JPMORGAN CHASE BANK, N.A.	3rd First National Plaza Chicago, IL 60602	William Sholten 312-732-4600 william.sholten@jpmorgan.com	GMAC Mortgage, LLC	Custodial
2412	796675130	JPMORGAN CHASE BANK, N.A.	3rd First National Plaza Chicago, IL 60602	William Sholten 312-732-4600 william.sholten@jpmorgan.com	GMAC Mortgage, LLC	Custodial
2413	796675148	JPMORGAN CHASE BANK, N.A.	3rd First National Plaza Chicago, IL 60602	William Sholten 312-732-4600 william.sholten@jpmorgan.com	GMAC Mortgage, LLC	Custodial
2414	796675155	JPMORGAN CHASE BANK, N.A.	3rd First National Plaza Chicago, IL 60602	William Sholten 312-732-4600 william.sholten@jpmorgan.com	GMAC Mortgage, LLC	Custodial
2415	796675163	JPMORGAN CHASE BANK, N.A.	3rd First National Plaza Chicago, IL 60602	William Sholten 312-732-4600 william.sholten@jpmorgan.com	GMAC Mortgage, LLC	Custodial
2416	796675171	JPMORGAN CHASE BANK, N.A.	3rd First National Plaza Chicago, IL 60602	William Sholten 312-732-4600 william.sholten@jpmorgan.com	GMAC Mortgage, LLC	Custodial
2417	796675189	JPMORGAN CHASE BANK, N.A.	3rd First National Plaza Chicago, IL 60602	William Sholten 312-732-4600 william.sholten@jpmorgan.com	GMAC Mortgage, LLC	Custodial
2418	796675197	JPMORGAN CHASE BANK, N.A.	3rd First National Plaza Chicago, IL 60602	William Sholten 312-732-4600 william.sholten@jpmorgan.com	GMAC Mortgage, LLC	Custodial
2419	796675205	JPMORGAN CHASE BANK, N.A.	3rd First National Plaza Chicago, IL 60602	William Sholten 312-732-4600 william.sholten@jpmorgan.com	GMAC Mortgage, LLC	Custodial
2420	796675213	JPMORGAN CHASE BANK, N.A.	3rd First National Plaza Chicago, IL 60602	William Sholten 312-732-4600 william.sholten@jpmorgan.com	GMAC Mortgage, LLC	Custodial
2421	796675221	JPMORGAN CHASE BANK, N.A.	3rd First National Plaza Chicago, IL 60602	William Sholten 312-732-4600 william.sholten@jpmorgan.com	GMAC Mortgage, LLC	Custodial
2422	796675239	JPMORGAN CHASE BANK, N.A.	3rd First National Plaza Chicago, IL 60602	William Sholten 312-732-4600 william.sholten@jpmorgan.com	GMAC Mortgage, LLC	Custodial
2423	796675247	JPMORGAN CHASE BANK, N.A.	3rd First National Plaza Chicago, IL 60602	William Sholten 312-732-4600 william.sholten@jpmorgan.com	GMAC Mortgage, LLC	Custodial
2424	796675254	JPMORGAN CHASE BANK, N.A.	3rd First National Plaza Chicago, IL 60602	William Sholten 312-732-4600 william.sholten@jpmorgan.com	GMAC Mortgage, LLC	Custodial
2425	796675262	JPMORGAN CHASE BANK, N.A.	3rd First National Plaza Chicago, IL 60602	William Sholten 312-732-4600 william.sholten@jpmorgan.com	GMAC Mortgage, LLC	Custodial
2426	796675270	JPMORGAN CHASE BANK, N.A.	3rd First National Plaza Chicago, IL 60602	William Sholten 312-732-4600 william.sholten@jpmorgan.com	GMAC Mortgage, LLC	Custodial
2427	796675288	JPMORGAN CHASE BANK, N.A.	3rd First National Plaza Chicago, IL 60602	William Sholten 312-732-4600 william.sholten@jpmorgan.com	GMAC Mortgage, LLC	Custodial
2428	796675296	JPMORGAN CHASE BANK, N.A.	3rd First National Plaza Chicago, IL 60602	William Sholten 312-732-4600 william.sholten@jpmorgan.com	GMAC Mortgage, LLC	Custodial
2429	796675304	JPMORGAN CHASE BANK, N.A.	3rd First National Plaza Chicago, IL 60602	William Sholten 312-732-4600 william.sholten@jpmorgan.com	GMAC Mortgage, LLC	Custodial
2430	796675312	JPMORGAN CHASE BANK, N.A.	3rd First National Plaza Chicago, IL 60602	William Sholten 312-732-4600 william.sholten@jpmorgan.com	GMAC Mortgage, LLC	Custodial
2431	796675320	JPMORGAN CHASE BANK, N.A.	3rd First National Plaza Chicago, IL 60602	William Sholten 312-732-4600 william.sholten@jpmorgan.com	GMAC Mortgage, LLC	Custodial
2432	796675338	JPMORGAN CHASE BANK, N.A.	3rd First National Plaza Chicago, IL 60602	William Sholten 312-732-4600 william.sholten@jpmorgan.com	GMAC Mortgage, LLC	Custodial
2433	796675346	JPMORGAN CHASE BANK, N.A.	3rd First National Plaza Chicago, IL 60602	William Sholten 312-732-4600 william.sholten@jpmorgan.com	GMAC Mortgage, LLC	Custodial
2434	796675353	JPMORGAN CHASE BANK, N.A.	3rd First National Plaza Chicago, IL 60602	William Sholten 312-732-4600 william.sholten@jpmorgan.com	GMAC Mortgage, LLC	Custodial
2435	796675361	JPMORGAN CHASE BANK, N.A.	3rd First National Plaza Chicago, IL 60602	William Sholten 312-732-4600 william.sholten@jpmorgan.com	GMAC Mortgage, LLC	Custodial
2436	796675379	JPMORGAN CHASE BANK, N.A.	3rd First National Plaza Chicago, IL 60602	William Sholten 312-732-4600 william.sholten@jpmorgan.com	GMAC Mortgage, LLC	Custodial
2437	796675387	JPMORGAN CHASE BANK, N.A.	3rd First National Plaza Chicago, IL 60602	William Sholten 312-732-4600 william.sholten@jpmorgan.com	GMAC Mortgage, LLC	Custodial
2438	796675395	JPMORGAN CHASE BANK, N.A.	3rd First National Plaza Chicago, IL 60602	William Sholten 312-732-4600 william.sholten@jpmorgan.com	GMAC Mortgage, LLC	Custodial
2439	796675403	JPMORGAN CHASE BANK, N.A.	3rd First National Plaza Chicago, IL 60602	William Sholten 312-732-4600 william.sholten@jpmorgan.com	GMAC Mortgage, LLC	Custodial
2440	796675411	JPMORGAN CHASE BANK, N.A.	3rd First National Plaza Chicago, IL 60602	William Sholten 312-732-4600 william.sholten@jpmorgan.com	GMAC Mortgage, LLC	Custodial
2441	796675429	JPMORGAN CHASE BANK, N.A.	3rd First National Plaza Chicago, IL 60602	William Sholten 312-732-4600 william.sholten@jpmorgan.com	GMAC Mortgage, LLC	Custodial
2442	796675437	JPMORGAN CHASE BANK, N.A.	3rd First National Plaza Chicago, IL 60602	William Sholten 312-732-4600 william.sholten@jpmorgan.com	GMAC Mortgage, LLC	Custodial
2443	796675445	JPMORGAN CHASE BANK, N.A.	3rd First National Plaza Chicago, IL 60602	William Sholten 312-732-4600 william.sholten@jpmorgan.com	GMAC Mortgage, LLC	Custodial
2444	796675452	JPMORGAN CHASE BANK, N.A.	3rd First National Plaza Chicago, IL 60602	William Sholten 312-732-4600 william.sholten@jpmorgan.com	GMAC Mortgage, LLC	Custodial
2445	796675460	JPMORGAN CHASE BANK, N.A.	3rd First National Plaza Chicago, IL 60602	William Sholten 312-732-4600 william.sholten@jpmorgan.com	GMAC Mortgage, LLC	Custodial
2446	796675478	JPMORGAN CHASE BANK, N.A.	3rd First National Plaza Chicago, IL 60602	William Sholten 312-732-4600 william.sholten@jpmorgan.com	GMAC Mortgage, LLC	Custodial
2447	796675486	JPMORGAN CHASE BANK, N.A.	3rd First National Plaza Chicago, IL 60602	William Sholten 312-732-4600 william.sholten@jpmorgan.com	GMAC Mortgage, LLC	Custodial
2448	796675494	JPMORGAN CHASE BANK, N.A.	3rd First National Plaza Chicago, IL 60602	William Sholten 312-732-4600 william.sholten@jpmorgan.com	GMAC Mortgage, LLC	Custodial
2449	796675502	JPMORGAN CHASE BANK, N.A.	3rd First National Plaza Chicago, IL 60602	William Sholten 312-732-4600 william.sholten@jpmorgan.com	GMAC Mortgage, LLC	Custodial
2450	796675510	JPMORGAN CHASE BANK, N.A.	3rd First National Plaza Chicago, IL 60602	William Sholten 312-732-4600 william.sholten@jpmorgan.com	GMAC Mortgage, LLC	Custodial
2451	796675528	JPMORGAN CHASE BANK, N.A.	3rd First National Plaza Chicago, IL 60602	William Sholten 312-732-4600 william.sholten@jpmorgan.com	GMAC Mortgage, LLC	Custodial

Privileged and Confidential

Exhibit B - Bank Accounts

Ref #	Account Number	Bank	Address	Contact	Corporate/Company Code	Account Type
2452	796675536	JPMORGAN CHASE BANK, N.A.	3rd First National Plaza Chicago, IL 60602	William Sholten 312-732-4600 william.sholten@jpmorgan.com	GMAC Mortgage, LLC	Custodial
2453	796675544	JPMORGAN CHASE BANK, N.A.	3rd First National Plaza Chicago, IL 60602	William Sholten 312-732-4600 william.sholten@jpmorgan.com	GMAC Mortgage, LLC	Custodial
2454	796675551	JPMORGAN CHASE BANK, N.A.	3rd First National Plaza Chicago, IL 60602	William Sholten 312-732-4600 william.sholten@jpmorgan.com	GMAC Mortgage, LLC	Custodial
2455	796675569	JPMORGAN CHASE BANK, N.A.	3rd First National Plaza Chicago, IL 60602	William Sholten 312-732-4600 william.sholten@jpmorgan.com	GMAC Mortgage, LLC	Custodial
2456	796675577	JPMORGAN CHASE BANK, N.A.	3rd First National Plaza Chicago, IL 60602	William Sholten 312-732-4600 william.sholten@jpmorgan.com	GMAC Mortgage, LLC	Custodial
2457	796675585	JPMORGAN CHASE BANK, N.A.	3rd First National Plaza Chicago, IL 60602	William Sholten 312-732-4600 william.sholten@jpmorgan.com	GMAC Mortgage, LLC	Custodial
2458	796675593	JPMORGAN CHASE BANK, N.A.	3rd First National Plaza Chicago, IL 60602	William Sholten 312-732-4600 william.sholten@jpmorgan.com	GMAC Mortgage, LLC	Custodial
2459	796675601	JPMORGAN CHASE BANK, N.A.	3rd First National Plaza Chicago, IL 60602	William Sholten 312-732-4600 william.sholten@jpmorgan.com	GMAC Mortgage, LLC	Custodial
2460	796675619	JPMORGAN CHASE BANK, N.A.	3rd First National Plaza Chicago, IL 60602	William Sholten 312-732-4600 william.sholten@jpmorgan.com	GMAC Mortgage, LLC	Custodial
2461	796675627	JPMORGAN CHASE BANK, N.A.	3rd First National Plaza Chicago, IL 60602	William Sholten 312-732-4600 william.sholten@jpmorgan.com	GMAC Mortgage, LLC	Custodial
2462	796675635	JPMORGAN CHASE BANK, N.A.	3rd First National Plaza Chicago, IL 60602	William Sholten 312-732-4600 william.sholten@jpmorgan.com	GMAC Mortgage, LLC	Custodial
2463	796675643	JPMORGAN CHASE BANK, N.A.	3rd First National Plaza Chicago, IL 60602	William Sholten 312-732-4600 william.sholten@jpmorgan.com	GMAC Mortgage, LLC	Custodial
2464	796675650	JPMORGAN CHASE BANK, N.A.	3rd First National Plaza Chicago, IL 60602	William Sholten 312-732-4600 william.sholten@jpmorgan.com	GMAC Mortgage, LLC	Custodial
2465	796675668	JPMORGAN CHASE BANK, N.A.	3rd First National Plaza Chicago, IL 60602	William Sholten 312-732-4600 william.sholten@jpmorgan.com	GMAC Mortgage, LLC	Custodial
2466	796675676	JPMORGAN CHASE BANK, N.A.	3rd First National Plaza Chicago, IL 60602	William Sholten 312-732-4600 william.sholten@jpmorgan.com	GMAC Mortgage, LLC	Custodial
2467	796675684	JPMORGAN CHASE BANK, N.A.	3rd First National Plaza Chicago, IL 60602	William Sholten 312-732-4600 william.sholten@jpmorgan.com	GMAC Mortgage, LLC	Custodial
2468	796675692	JPMORGAN CHASE BANK, N.A.	3rd First National Plaza Chicago, IL 60602	William Sholten 312-732-4600 william.sholten@jpmorgan.com	GMAC Mortgage, LLC	Custodial
2469	796675700	JPMORGAN CHASE BANK, N.A.	3rd First National Plaza Chicago, IL 60602	William Sholten 312-732-4600 william.sholten@jpmorgan.com	GMAC Mortgage, LLC	Custodial
2470	796675718	JPMORGAN CHASE BANK, N.A.	3rd First National Plaza Chicago, IL 60602	William Sholten 312-732-4600 william.sholten@jpmorgan.com	GMAC Mortgage, LLC	Custodial
2471	796675726	JPMORGAN CHASE BANK, N.A.	3rd First National Plaza Chicago, IL 60602	William Sholten 312-732-4600 william.sholten@jpmorgan.com	GMAC Mortgage, LLC	Custodial
2472	796675734	JPMORGAN CHASE BANK, N.A.	3rd First National Plaza Chicago, IL 60602	William Sholten 312-732-4600 william.sholten@jpmorgan.com	GMAC Mortgage, LLC	Custodial
2473	796675742	JPMORGAN CHASE BANK, N.A.	3rd First National Plaza Chicago, IL 60602	William Sholten 312-732-4600 william.sholten@jpmorgan.com	GMAC Mortgage, LLC	Custodial
2474	796675759	JPMORGAN CHASE BANK, N.A.	3rd First National Plaza Chicago, IL 60602	William Sholten 312-732-4600 william.sholten@jpmorgan.com	GMAC Mortgage, LLC	Custodial
2475	796675767	JPMORGAN CHASE BANK, N.A.	3rd First National Plaza Chicago, IL 60602	William Sholten 312-732-4600 william.sholten@jpmorgan.com	GMAC Mortgage, LLC	Custodial
2476	796675775	JPMORGAN CHASE BANK, N.A.	3rd First National Plaza Chicago, IL 60602	William Sholten 312-732-4600 william.sholten@jpmorgan.com	GMAC Mortgage, LLC	Custodial
2477	796675783	JPMORGAN CHASE BANK, N.A.	3rd First National Plaza Chicago, IL 60602	William Sholten 312-732-4600 william.sholten@jpmorgan.com	GMAC Mortgage, LLC	Custodial
2478	796675791	JPMORGAN CHASE BANK, N.A.	3rd First National Plaza Chicago, IL 60602	William Sholten 312-732-4600 william.sholten@jpmorgan.com	GMAC Mortgage, LLC	Custodial
2479	796675809	JPMORGAN CHASE BANK, N.A.	3rd First National Plaza Chicago, IL 60602	William Sholten 312-732-4600 william.sholten@jpmorgan.com	GMAC Mortgage, LLC	Custodial
2480	796675817	JPMORGAN CHASE BANK, N.A.	3rd First National Plaza Chicago, IL 60602	William Sholten 312-732-4600 william.sholten@jpmorgan.com	GMAC Mortgage, LLC	Custodial
2481	796675825	JPMORGAN CHASE BANK, N.A.	3rd First National Plaza Chicago, IL 60602	William Sholten 312-732-4600 william.sholten@jpmorgan.com	GMAC Mortgage, LLC	Custodial
2482	796675833	JPMORGAN CHASE BANK, N.A.	3rd First National Plaza Chicago, IL 60602	William Sholten 312-732-4600 william.sholten@jpmorgan.com	GMAC Mortgage, LLC	Custodial
2483	796675841	JPMORGAN CHASE BANK, N.A.	3rd First National Plaza Chicago, IL 60602	William Sholten 312-732-4600 william.sholten@jpmorgan.com	GMAC Mortgage, LLC	Custodial
2484	796675858	JPMORGAN CHASE BANK, N.A.	3rd First National Plaza Chicago, IL 60602	William Sholten 312-732-4600 william.sholten@jpmorgan.com	GMAC Mortgage, LLC	Custodial
2485	796675866	JPMORGAN CHASE BANK, N.A.	3rd First National Plaza Chicago, IL 60602	William Sholten 312-732-4600 william.sholten@jpmorgan.com	GMAC Mortgage, LLC	Custodial
2486	796675874	JPMORGAN CHASE BANK, N.A.	3rd First National Plaza Chicago, IL 60602	William Sholten 312-732-4600 william.sholten@jpmorgan.com	GMAC Mortgage, LLC	Custodial
2487	796675882	JPMORGAN CHASE BANK, N.A.	3rd First National Plaza Chicago, IL 60602	William Sholten 312-732-4600 william.sholten@jpmorgan.com	GMAC Mortgage, LLC	Custodial
2488	796675890	JPMORGAN CHASE BANK, N.A.	3rd First National Plaza Chicago, IL 60602	William Sholten 312-732-4600 william.sholten@jpmorgan.com	GMAC Mortgage, LLC	Custodial
2489	796675908	JPMORGAN CHASE BANK, N.A.	3rd First National Plaza Chicago, IL 60602	William Sholten 312-732-4600 william.sholten@jpmorgan.com	GMAC Mortgage, LLC	Custodial
2490	796675916	JPMORGAN CHASE BANK, N.A.	3rd First National Plaza Chicago, IL 60602	William Sholten 312-732-4600 william.sholten@jpmorgan.com	GMAC Mortgage, LLC	Custodial
2491	796675924	JPMORGAN CHASE BANK, N.A.	3rd First National Plaza Chicago, IL 60602	William Sholten 312-732-4600 william.sholten@jpmorgan.com	GMAC Mortgage, LLC	Custodial
2492	796675932	JPMORGAN CHASE BANK, N.A.	3rd First National Plaza Chicago, IL 60602	William Sholten 312-732-4600 william.sholten@jpmorgan.com	GMAC Mortgage, LLC	Custodial
2493	796675940	JPMORGAN CHASE BANK, N.A.	3rd First National Plaza Chicago, IL 60602	William Sholten 312-732-4600 william.sholten@jpmorgan.com	GMAC Mortgage, LLC	Custodial
2494	796675957	JPMORGAN CHASE BANK, N.A.	3rd First National Plaza Chicago, IL 60602	William Sholten 312-732-4600 william.sholten@jpmorgan.com	GMAC Mortgage, LLC	Custodial

Privileged and Confidential

Exhibit B - Bank Accounts

Ref #	Account Number	Bank	Address	Contact	Corporate/Company Code	Account Type
2495	796675965	JPMORGAN CHASE BANK, N.A.	3rd First National Plaza Chicago, IL 60602	William Sholten 312-732-4600 william.sholten@jpmorgan.com	GMAC Mortgage, LLC	Custodial
2496	796675973	JPMORGAN CHASE BANK, N.A.	3rd First National Plaza Chicago, IL 60602	William Sholten 312-732-4600 william.sholten@jpmorgan.com	GMAC Mortgage, LLC	Custodial
2497	796675981	JPMORGAN CHASE BANK, N.A.	3rd First National Plaza Chicago, IL 60602	William Sholten 312-732-4600 william.sholten@jpmorgan.com	GMAC Mortgage, LLC	Custodial
2498	796675999	JPMORGAN CHASE BANK, N.A.	3rd First National Plaza Chicago, IL 60602	William Sholten 312-732-4600 william.sholten@jpmorgan.com	GMAC Mortgage, LLC	Custodial
2499	796676005	JPMORGAN CHASE BANK, N.A.	3rd First National Plaza Chicago, IL 60602	William Sholten 312-732-4600 william.sholten@jpmorgan.com	GMAC Mortgage, LLC	Custodial
2500	796676013	JPMORGAN CHASE BANK, N.A.	3rd First National Plaza Chicago, IL 60602	William Sholten 312-732-4600 william.sholten@jpmorgan.com	GMAC Mortgage, LLC	Custodial
2501	796676021	JPMORGAN CHASE BANK, N.A.	3rd First National Plaza Chicago, IL 60602	William Sholten 312-732-4600 william.sholten@jpmorgan.com	GMAC Mortgage, LLC	Custodial
2502	796676039	JPMORGAN CHASE BANK, N.A.	3rd First National Plaza Chicago, IL 60602	William Sholten 312-732-4600 william.sholten@jpmorgan.com	GMAC Mortgage, LLC	Custodial
2503	796676047	JPMORGAN CHASE BANK, N.A.	3rd First National Plaza Chicago, IL 60602	William Sholten 312-732-4600 william.sholten@jpmorgan.com	GMAC Mortgage, LLC	Custodial
2504	796676054	JPMORGAN CHASE BANK, N.A.	3rd First National Plaza Chicago, IL 60602	William Sholten 312-732-4600 william.sholten@jpmorgan.com	GMAC Mortgage, LLC	Custodial
2505	796676062	JPMORGAN CHASE BANK, N.A.	3rd First National Plaza Chicago, IL 60602	William Sholten 312-732-4600 william.sholten@jpmorgan.com	GMAC Mortgage, LLC	Custodial
2506	796676070	JPMORGAN CHASE BANK, N.A.	3rd First National Plaza Chicago, IL 60602	William Sholten 312-732-4600 william.sholten@jpmorgan.com	GMAC Mortgage, LLC	Custodial
2507	796676088	JPMORGAN CHASE BANK, N.A.	3rd First National Plaza Chicago, IL 60602	William Sholten 312-732-4600 william.sholten@jpmorgan.com	GMAC Mortgage, LLC	Custodial
2508	796676096	JPMORGAN CHASE BANK, N.A.	3rd First National Plaza Chicago, IL 60602	William Sholten 312-732-4600 william.sholten@jpmorgan.com	GMAC Mortgage, LLC	Custodial
2509	796676104	JPMORGAN CHASE BANK, N.A.	3rd First National Plaza Chicago, IL 60602	William Sholten 312-732-4600 william.sholten@jpmorgan.com	GMAC Mortgage, LLC	Custodial
2510	796676112	JPMORGAN CHASE BANK, N.A.	3rd First National Plaza Chicago, IL 60602	William Sholten 312-732-4600 william.sholten@jpmorgan.com	GMAC Mortgage, LLC	Custodial
2511	796676120	JPMORGAN CHASE BANK, N.A.	3rd First National Plaza Chicago, IL 60602	William Sholten 312-732-4600 william.sholten@jpmorgan.com	GMAC Mortgage, LLC	Custodial
2512	796676138	JPMORGAN CHASE BANK, N.A.	3rd First National Plaza Chicago, IL 60602	William Sholten 312-732-4600 william.sholten@jpmorgan.com	GMAC Mortgage, LLC	Custodial
2513	796676146	JPMORGAN CHASE BANK, N.A.	3rd First National Plaza Chicago, IL 60602	William Sholten 312-732-4600 william.sholten@jpmorgan.com	GMAC Mortgage, LLC	Custodial
2514	796676153	JPMORGAN CHASE BANK, N.A.	3rd First National Plaza Chicago, IL 60602	William Sholten 312-732-4600 william.sholten@jpmorgan.com	GMAC Mortgage, LLC	Custodial
2515	796676161	JPMORGAN CHASE BANK, N.A.	3rd First National Plaza Chicago, IL 60602	William Sholten 312-732-4600 william.sholten@jpmorgan.com	GMAC Mortgage, LLC	Custodial
2516	796676179	JPMORGAN CHASE BANK, N.A.	3rd First National Plaza Chicago, IL 60602	William Sholten 312-732-4600 william.sholten@jpmorgan.com	GMAC Mortgage, LLC	Custodial
2517	796676187	JPMORGAN CHASE BANK, N.A.	3rd First National Plaza Chicago, IL 60602	William Sholten 312-732-4600 william.sholten@jpmorgan.com	GMAC Mortgage, LLC	Custodial
2518	796676195	JPMORGAN CHASE BANK, N.A.	3rd First National Plaza Chicago, IL 60602	William Sholten 312-732-4600 william.sholten@jpmorgan.com	GMAC Mortgage, LLC	Custodial
2519	796676203	JPMORGAN CHASE BANK, N.A.	3rd First National Plaza Chicago, IL 60602	William Sholten 312-732-4600 william.sholten@jpmorgan.com	GMAC Mortgage, LLC	Custodial
2520	796676211	JPMORGAN CHASE BANK, N.A.	3rd First National Plaza Chicago, IL 60602	William Sholten 312-732-4600 william.sholten@jpmorgan.com	GMAC Mortgage, LLC	Custodial
2521	796676229	JPMORGAN CHASE BANK, N.A.	3rd First National Plaza Chicago, IL 60602	William Sholten 312-732-4600 william.sholten@jpmorgan.com	GMAC Mortgage, LLC	Custodial
2522	796676237	JPMORGAN CHASE BANK, N.A.	3rd First National Plaza Chicago, IL 60602	William Sholten 312-732-4600 william.sholten@jpmorgan.com	GMAC Mortgage, LLC	Custodial
2523	796676245	JPMORGAN CHASE BANK, N.A.	3rd First National Plaza Chicago, IL 60602	William Sholten 312-732-4600 william.sholten@jpmorgan.com	GMAC Mortgage, LLC	Custodial
2524	796676252	JPMORGAN CHASE BANK, N.A.	3rd First National Plaza Chicago, IL 60602	William Sholten 312-732-4600 william.sholten@jpmorgan.com	GMAC Mortgage, LLC	Custodial
2525	796676260	JPMORGAN CHASE BANK, N.A.	3rd First National Plaza Chicago, IL 60602	William Sholten 312-732-4600 william.sholten@jpmorgan.com	GMAC Mortgage, LLC	Custodial
2526	796676278	JPMORGAN CHASE BANK, N.A.	3rd First National Plaza Chicago, IL 60602	William Sholten 312-732-4600 william.sholten@jpmorgan.com	GMAC Mortgage, LLC	Custodial
2527	796676286	JPMORGAN CHASE BANK, N.A.	3rd First National Plaza Chicago, IL 60602	William Sholten 312-732-4600 william.sholten@jpmorgan.com	GMAC Mortgage, LLC	Custodial
2528	796676294	JPMORGAN CHASE BANK, N.A.	3rd First National Plaza Chicago, IL 60602	William Sholten 312-732-4600 william.sholten@jpmorgan.com	GMAC Mortgage, LLC	Custodial
2529	796676302	JPMORGAN CHASE BANK, N.A.	3rd First National Plaza Chicago, IL 60602	William Sholten 312-732-4600 william.sholten@jpmorgan.com	GMAC Mortgage, LLC	Custodial
2530	796676310	JPMORGAN CHASE BANK, N.A.	3rd First National Plaza Chicago, IL 60602	William Sholten 312-732-4600 william.sholten@jpmorgan.com	GMAC Mortgage, LLC	Custodial
2531	796676328	JPMORGAN CHASE BANK, N.A.	3rd First National Plaza Chicago, IL 60602	William Sholten 312-732-4600 william.sholten@jpmorgan.com	GMAC Mortgage, LLC	Custodial
2532	796676336	JPMORGAN CHASE BANK, N.A.	3rd First National Plaza Chicago, IL 60602	William Sholten 312-732-4600 william.sholten@jpmorgan.com	GMAC Mortgage, LLC	Custodial
2533	796676344	JPMORGAN CHASE BANK, N.A.	3rd First National Plaza Chicago, IL 60602	William Sholten 312-732-4600 william.sholten@jpmorgan.com	GMAC Mortgage, LLC	Custodial
2534	796676351	JPMORGAN CHASE BANK, N.A.	3rd First National Plaza Chicago, IL 60602	William Sholten 312-732-4600 william.sholten@jpmorgan.com	GMAC Mortgage, LLC	Custodial
2535	796676369	JPMORGAN CHASE BANK, N.A.	3rd First National Plaza Chicago, IL 60602	William Sholten 312-732-4600 william.sholten@jpmorgan.com	GMAC Mortgage, LLC	Custodial
2536	796676377	JPMORGAN CHASE BANK, N.A.	3rd First National Plaza Chicago, IL 60602	William Sholten 312-732-4600 william.sholten@jpmorgan.com	GMAC Mortgage, LLC	Custodial
2537	796676385	JPMORGAN CHASE BANK, N.A.	3rd First National Plaza Chicago, IL 60602	William Sholten 312-732-4600 william.sholten@jpmorgan.com	GMAC Mortgage, LLC	Custodial

Privileged and Confidential

Exhibit B - Bank Accounts

Ref #	Account Number	Bank	Address	Contact	Corporate/Company Code	Account Type
2538	796676393	JPMORGAN CHASE BANK, N.A.	3rd First National Plaza Chicago, IL 60602	William Sholten 312-732-4600 william.sholten@jpmorgan.com	GMAC Mortgage, LLC	Custodial
2539	796676401	JPMORGAN CHASE BANK, N.A.	3rd First National Plaza Chicago, IL 60602	William Sholten 312-732-4600 william.sholten@jpmorgan.com	GMAC Mortgage, LLC	Custodial
2540	796676419	JPMORGAN CHASE BANK, N.A.	3rd First National Plaza Chicago, IL 60602	William Sholten 312-732-4600 william.sholten@jpmorgan.com	GMAC Mortgage, LLC	Custodial
2541	796676427	JPMORGAN CHASE BANK, N.A.	3rd First National Plaza Chicago, IL 60602	William Sholten 312-732-4600 william.sholten@jpmorgan.com	GMAC Mortgage, LLC	Custodial
2542	796676435	JPMORGAN CHASE BANK, N.A.	3rd First National Plaza Chicago, IL 60602	William Sholten 312-732-4600 william.sholten@jpmorgan.com	GMAC Mortgage, LLC	Custodial
2543	796676443	JPMORGAN CHASE BANK, N.A.	3rd First National Plaza Chicago, IL 60602	William Sholten 312-732-4600 william.sholten@jpmorgan.com	GMAC Mortgage, LLC	Custodial
2544	796676450	JPMORGAN CHASE BANK, N.A.	3rd First National Plaza Chicago, IL 60602	William Sholten 312-732-4600 william.sholten@jpmorgan.com	GMAC Mortgage, LLC	Custodial
2545	796676468	JPMORGAN CHASE BANK, N.A.	3rd First National Plaza Chicago, IL 60602	William Sholten 312-732-4600 william.sholten@jpmorgan.com	GMAC Mortgage, LLC	Custodial
2546	796676476	JPMORGAN CHASE BANK, N.A.	3rd First National Plaza Chicago, IL 60602	William Sholten 312-732-4600 william.sholten@jpmorgan.com	GMAC Mortgage, LLC	Custodial
2547	796676484	JPMORGAN CHASE BANK, N.A.	3rd First National Plaza Chicago, IL 60602	William Sholten 312-732-4600 william.sholten@jpmorgan.com	GMAC Mortgage, LLC	Custodial
2548	796676492	JPMORGAN CHASE BANK, N.A.	3rd First National Plaza Chicago, IL 60602	William Sholten 312-732-4600 william.sholten@jpmorgan.com	GMAC Mortgage, LLC	Custodial
2549	796676500	JPMORGAN CHASE BANK, N.A.	3rd First National Plaza Chicago, IL 60602	William Sholten 312-732-4600 william.sholten@jpmorgan.com	GMAC Mortgage, LLC	Custodial
2550	796676518	JPMORGAN CHASE BANK, N.A.	3rd First National Plaza Chicago, IL 60602	William Sholten 312-732-4600 william.sholten@jpmorgan.com	GMAC Mortgage, LLC	Custodial
2551	796676526	JPMORGAN CHASE BANK, N.A.	3rd First National Plaza Chicago, IL 60602	William Sholten 312-732-4600 william.sholten@jpmorgan.com	GMAC Mortgage, LLC	Custodial
2552	796676534	JPMORGAN CHASE BANK, N.A.	3rd First National Plaza Chicago, IL 60602	William Sholten 312-732-4600 william.sholten@jpmorgan.com	GMAC Mortgage, LLC	Custodial
2553	796676542	JPMORGAN CHASE BANK, N.A.	3rd First National Plaza Chicago, IL 60602	William Sholten 312-732-4600 william.sholten@jpmorgan.com	GMAC Mortgage, LLC	Custodial
2554	796676559	JPMORGAN CHASE BANK, N.A.	3rd First National Plaza Chicago, IL 60602	William Sholten 312-732-4600 william.sholten@jpmorgan.com	GMAC Mortgage, LLC	Custodial
2555	796676567	JPMORGAN CHASE BANK, N.A.	3rd First National Plaza Chicago, IL 60602	William Sholten 312-732-4600 william.sholten@jpmorgan.com	GMAC Mortgage, LLC	Custodial
2556	796676575	JPMORGAN CHASE BANK, N.A.	3rd First National Plaza Chicago, IL 60602	William Sholten 312-732-4600 william.sholten@jpmorgan.com	GMAC Mortgage, LLC	Custodial
2557	796676583	JPMORGAN CHASE BANK, N.A.	3rd First National Plaza Chicago, IL 60602	William Sholten 312-732-4600 william.sholten@jpmorgan.com	GMAC Mortgage, LLC	Custodial
2558	796676591	JPMORGAN CHASE BANK, N.A.	3rd First National Plaza Chicago, IL 60602	William Sholten 312-732-4600 william.sholten@jpmorgan.com	GMAC Mortgage, LLC	Custodial
2559	796676609	JPMORGAN CHASE BANK, N.A.	3rd First National Plaza Chicago, IL 60602	William Sholten 312-732-4600 william.sholten@jpmorgan.com	GMAC Mortgage, LLC	Custodial
2560	796676617	JPMORGAN CHASE BANK, N.A.	3rd First National Plaza Chicago, IL 60602	William Sholten 312-732-4600 william.sholten@jpmorgan.com	GMAC Mortgage, LLC	Custodial
2561	796676625	JPMORGAN CHASE BANK, N.A.	3rd First National Plaza Chicago, IL 60602	William Sholten 312-732-4600 william.sholten@jpmorgan.com	GMAC Mortgage, LLC	Custodial
2562	796676633	JPMORGAN CHASE BANK, N.A.	3rd First National Plaza Chicago, IL 60602	William Sholten 312-732-4600 william.sholten@jpmorgan.com	GMAC Mortgage, LLC	Custodial
2563	796676641	JPMORGAN CHASE BANK, N.A.	3rd First National Plaza Chicago, IL 60602	William Sholten 312-732-4600 william.sholten@jpmorgan.com	GMAC Mortgage, LLC	Custodial
2564	796676658	JPMORGAN CHASE BANK, N.A.	3rd First National Plaza Chicago, IL 60602	William Sholten 312-732-4600 william.sholten@jpmorgan.com	GMAC Mortgage, LLC	Custodial
2565	796676674	JPMORGAN CHASE BANK, N.A.	3rd First National Plaza Chicago, IL 60602	William Sholten 312-732-4600 william.sholten@jpmorgan.com	GMAC Mortgage, LLC	Custodial
2566	796676682	JPMORGAN CHASE BANK, N.A.	3rd First National Plaza Chicago, IL 60602	William Sholten 312-732-4600 william.sholten@jpmorgan.com	GMAC Mortgage, LLC	Custodial
2567	796676690	JPMORGAN CHASE BANK, N.A.	3rd First National Plaza Chicago, IL 60602	William Sholten 312-732-4600 william.sholten@jpmorgan.com	GMAC Mortgage, LLC	Custodial
2568	796676708	JPMORGAN CHASE BANK, N.A.	3rd First National Plaza Chicago, IL 60602	William Sholten 312-732-4600 william.sholten@jpmorgan.com	GMAC Mortgage, LLC	Custodial
2569	796676716	JPMORGAN CHASE BANK, N.A.	3rd First National Plaza Chicago, IL 60602	William Sholten 312-732-4600 william.sholten@jpmorgan.com	GMAC Mortgage, LLC	Custodial
2570	796676724	JPMORGAN CHASE BANK, N.A.	3rd First National Plaza Chicago, IL 60602	William Sholten 312-732-4600 william.sholten@jpmorgan.com	GMAC Mortgage, LLC	Custodial
2571	796676732	JPMORGAN CHASE BANK, N.A.	3rd First National Plaza Chicago, IL 60602	William Sholten 312-732-4600 william.sholten@jpmorgan.com	GMAC Mortgage, LLC	Custodial
2572	796676740	JPMORGAN CHASE BANK, N.A.	3rd First National Plaza Chicago, IL 60602	William Sholten 312-732-4600 william.sholten@jpmorgan.com	GMAC Mortgage, LLC	Custodial
2573	796676757	JPMORGAN CHASE BANK, N.A.	3rd First National Plaza Chicago, IL 60602	William Sholten 312-732-4600 william.sholten@jpmorgan.com	GMAC Mortgage, LLC	Custodial
2574	796676765	JPMORGAN CHASE BANK, N.A.	3rd First National Plaza Chicago, IL 60602	William Sholten 312-732-4600 william.sholten@jpmorgan.com	GMAC Mortgage, LLC	Custodial
2575	796676773	JPMORGAN CHASE BANK, N.A.	3rd First National Plaza Chicago, IL 60602	William Sholten 312-732-4600 william.sholten@jpmorgan.com	GMAC Mortgage, LLC	Custodial
2576	796676781	JPMORGAN CHASE BANK, N.A.	3rd First National Plaza Chicago, IL 60602	William Sholten 312-732-4600 william.sholten@jpmorgan.com	GMAC Mortgage, LLC	Custodial
2577	796676799	JPMORGAN CHASE BANK, N.A.	3rd First National Plaza Chicago, IL 60602	William Sholten 312-732-4600 william.sholten@jpmorgan.com	GMAC Mortgage, LLC	Custodial
2578	796676807	JPMORGAN CHASE BANK, N.A.	3rd First National Plaza Chicago, IL 60602	William Sholten 312-732-4600 william.sholten@jpmorgan.com	GMAC Mortgage, LLC	Custodial
2579	796676815	JPMORGAN CHASE BANK, N.A.	3rd First National Plaza Chicago, IL 60602	William Sholten 312-732-4600 william.sholten@jpmorgan.com	GMAC Mortgage, LLC	Custodial
2580	796676823	JPMORGAN CHASE BANK, N.A.	3rd First National Plaza Chicago, IL 60602	William Sholten 312-732-4600 william.sholten@jpmorgan.com	GMAC Mortgage, LLC	Custodial

Privileged and Confidential

Exhibit B - Bank Accounts

Ref #	Account Number	Bank	Address	Contact	Corporate/Company Code	Account Type
2581	796676831	JPMORGAN CHASE BANK, N.A.	3rd First National Plaza Chicago, IL 60602	William Sholten 312-732-4600 william.sholten@jpmorgan.com	GMAC Mortgage, LLC	Custodial
2582	796676849	JPMORGAN CHASE BANK, N.A.	3rd First National Plaza Chicago, IL 60602	William Sholten 312-732-4600 william.sholten@jpmorgan.com	GMAC Mortgage, LLC	Custodial
2583	796676872	JPMORGAN CHASE BANK, N.A.	3rd First National Plaza Chicago, IL 60602	William Sholten 312-732-4600 william.sholten@jpmorgan.com	GMAC Mortgage, LLC	Custodial
2584	796676898	JPMORGAN CHASE BANK, N.A.	3rd First National Plaza Chicago, IL 60602	William Sholten 312-732-4600 william.sholten@jpmorgan.com	GMAC Mortgage, LLC	Custodial
2585	796676906	JPMORGAN CHASE BANK, N.A.	3rd First National Plaza Chicago, IL 60602	William Sholten 312-732-4600 william.sholten@jpmorgan.com	GMAC Mortgage, LLC	Custodial
2586	796676914	JPMORGAN CHASE BANK, N.A.	3rd First National Plaza Chicago, IL 60602	William Sholten 312-732-4600 william.sholten@jpmorgan.com	GMAC Mortgage, LLC	Custodial
2587	796676922	JPMORGAN CHASE BANK, N.A.	3rd First National Plaza Chicago, IL 60602	William Sholten 312-732-4600 william.sholten@jpmorgan.com	GMAC Mortgage, LLC	Custodial
2588	796676930	JPMORGAN CHASE BANK, N.A.	3rd First National Plaza Chicago, IL 60602	William Sholten 312-732-4600 william.sholten@jpmorgan.com	GMAC Mortgage, LLC	Custodial
2589	796676948	JPMORGAN CHASE BANK, N.A.	3rd First National Plaza Chicago, IL 60602	William Sholten 312-732-4600 william.sholten@jpmorgan.com	GMAC Mortgage, LLC	Custodial
2590	796676955	JPMORGAN CHASE BANK, N.A.	3rd First National Plaza Chicago, IL 60602	William Sholten 312-732-4600 william.sholten@jpmorgan.com	GMAC Mortgage, LLC	Custodial
2591	796676963	JPMORGAN CHASE BANK, N.A.	3rd First National Plaza Chicago, IL 60602	William Sholten 312-732-4600 william.sholten@jpmorgan.com	GMAC Mortgage, LLC	Custodial
2592	796676971	JPMORGAN CHASE BANK, N.A.	3rd First National Plaza Chicago, IL 60602	William Sholten 312-732-4600 william.sholten@jpmorgan.com	GMAC Mortgage, LLC	Custodial
2593	796676989	JPMORGAN CHASE BANK, N.A.	3rd First National Plaza Chicago, IL 60602	William Sholten 312-732-4600 william.sholten@jpmorgan.com	GMAC Mortgage, LLC	Custodial
2594	796676997	JPMORGAN CHASE BANK, N.A.	3rd First National Plaza Chicago, IL 60602	William Sholten 312-732-4600 william.sholten@jpmorgan.com	GMAC Mortgage, LLC	Custodial
2595	796677003	JPMORGAN CHASE BANK, N.A.	3rd First National Plaza Chicago, IL 60602	William Sholten 312-732-4600 william.sholten@jpmorgan.com	GMAC Mortgage, LLC	Custodial
2596	796677011	JPMORGAN CHASE BANK, N.A.	3rd First National Plaza Chicago, IL 60602	William Sholten 312-732-4600 william.sholten@jpmorgan.com	GMAC Mortgage, LLC	Custodial
2597	796677029	JPMORGAN CHASE BANK, N.A.	3rd First National Plaza Chicago, IL 60602	William Sholten 312-732-4600 william.sholten@jpmorgan.com	GMAC Mortgage, LLC	Custodial
2598	796677045	JPMORGAN CHASE BANK, N.A.	3rd First National Plaza Chicago, IL 60602	William Sholten 312-732-4600 william.sholten@jpmorgan.com	GMAC Mortgage, LLC	Custodial
2599	796677052	JPMORGAN CHASE BANK, N.A.	3rd First National Plaza Chicago, IL 60602	William Sholten 312-732-4600 william.sholten@jpmorgan.com	GMAC Mortgage, LLC	Custodial
2600	796677060	JPMORGAN CHASE BANK, N.A.	3rd First National Plaza Chicago, IL 60602	William Sholten 312-732-4600 william.sholten@jpmorgan.com	GMAC Mortgage, LLC	Custodial
2601	796677078	JPMORGAN CHASE BANK, N.A.	3rd First National Plaza Chicago, IL 60602	William Sholten 312-732-4600 william.sholten@jpmorgan.com	GMAC Mortgage, LLC	Custodial
2602	796677086	JPMORGAN CHASE BANK, N.A.	3rd First National Plaza Chicago, IL 60602	William Sholten 312-732-4600 william.sholten@jpmorgan.com	GMAC Mortgage, LLC	Custodial
2603	796677094	JPMORGAN CHASE BANK, N.A.	3rd First National Plaza Chicago, IL 60602	William Sholten 312-732-4600 william.sholten@jpmorgan.com	GMAC Mortgage, LLC	Custodial
2604	796677102	JPMORGAN CHASE BANK, N.A.	3rd First National Plaza Chicago, IL 60602	William Sholten 312-732-4600 william.sholten@jpmorgan.com	GMAC Mortgage, LLC	Custodial
2605	796677128	JPMORGAN CHASE BANK, N.A.	3rd First National Plaza Chicago, IL 60602	William Sholten 312-732-4600 william.sholten@jpmorgan.com	GMAC Mortgage, LLC	Custodial
2606	796677136	JPMORGAN CHASE BANK, N.A.	3rd First National Plaza Chicago, IL 60602	William Sholten 312-732-4600 william.sholten@jpmorgan.com	GMAC Mortgage, LLC	Custodial
2607	796677144	JPMORGAN CHASE BANK, N.A.	3rd First National Plaza Chicago, IL 60602	William Sholten 312-732-4600 william.sholten@jpmorgan.com	GMAC Mortgage, LLC	Custodial
2608	796677151	JPMORGAN CHASE BANK, N.A.	3rd First National Plaza Chicago, IL 60602	William Sholten 312-732-4600 william.sholten@jpmorgan.com	GMAC Mortgage, LLC	Custodial
2609	796677169	JPMORGAN CHASE BANK, N.A.	3rd First National Plaza Chicago, IL 60602	William Sholten 312-732-4600 william.sholten@jpmorgan.com	GMAC Mortgage, LLC	Custodial
2610	796677177	JPMORGAN CHASE BANK, N.A.	3rd First National Plaza Chicago, IL 60602	William Sholten 312-732-4600 william.sholten@jpmorgan.com	GMAC Mortgage, LLC	Custodial
2611	796677185	JPMORGAN CHASE BANK, N.A.	3rd First National Plaza Chicago, IL 60602	William Sholten 312-732-4600 william.sholten@jpmorgan.com	GMAC Mortgage, LLC	Custodial
2612	796677201	JPMORGAN CHASE BANK, N.A.	3rd First National Plaza Chicago, IL 60602	William Sholten 312-732-4600 william.sholten@jpmorgan.com	GMAC Mortgage, LLC	Custodial
2613	796677219	JPMORGAN CHASE BANK, N.A.	3rd First National Plaza Chicago, IL 60602	William Sholten 312-732-4600 william.sholten@jpmorgan.com	GMAC Mortgage, LLC	Custodial
2614	796677227	JPMORGAN CHASE BANK, N.A.	3rd First National Plaza Chicago, IL 60602	William Sholten 312-732-4600 william.sholten@jpmorgan.com	GMAC Mortgage, LLC	Custodial
2615	796677235	JPMORGAN CHASE BANK, N.A.	3rd First National Plaza Chicago, IL 60602	William Sholten 312-732-4600 william.sholten@jpmorgan.com	GMAC Mortgage, LLC	Custodial
2616	796677243	JPMORGAN CHASE BANK, N.A.	3rd First National Plaza Chicago, IL 60602	William Sholten 312-732-4600 william.sholten@jpmorgan.com	GMAC Mortgage, LLC	Custodial
2617	796677268	JPMORGAN CHASE BANK, N.A.	3rd First National Plaza Chicago, IL 60602	William Sholten 312-732-4600 william.sholten@jpmorgan.com	GMAC Mortgage, LLC	Custodial
2618	796677276	JPMORGAN CHASE BANK, N.A.	3rd First National Plaza Chicago, IL 60602	William Sholten 312-732-4600 william.sholten@jpmorgan.com	GMAC Mortgage, LLC	Custodial
2619	796677284	JPMORGAN CHASE BANK, N.A.	3rd First National Plaza Chicago, IL 60602	William Sholten 312-732-4600 william.sholten@jpmorgan.com	GMAC Mortgage, LLC	Custodial
2620	796677292	JPMORGAN CHASE BANK, N.A.	3rd First National Plaza Chicago, IL 60602	William Sholten 312-732-4600 william.sholten@jpmorgan.com	GMAC Mortgage, LLC	Custodial
2621	796677300	JPMORGAN CHASE BANK, N.A.	3rd First National Plaza Chicago, IL 60602	William Sholten 312-732-4600 william.sholten@jpmorgan.com	GMAC Mortgage, LLC	Custodial
2622	796677318	JPMORGAN CHASE BANK, N.A.	3rd First National Plaza Chicago, IL 60602	William Sholten 312-732-4600 william.sholten@jpmorgan.com	GMAC Mortgage, LLC	Custodial
2623	796677326	JPMORGAN CHASE BANK, N.A.	3rd First National Plaza Chicago, IL 60602	William Sholten 312-732-4600 william.sholten@jpmorgan.com	GMAC Mortgage, LLC	Custodial

Privileged and Confidential

Exhibit B - Bank Accounts

Ref #	Account Number	Bank	Address	Contact	Corporate/Company Code	Account Type
2624	796677334	JPMORGAN CHASE BANK, N.A.	3rd First National Plaza Chicago, IL 60602	William Sholten 312-732-4600 william.sholten@jpmorgan.com	GMAC Mortgage, LLC	Custodial
2625	796677342	JPMORGAN CHASE BANK, N.A.	3rd First National Plaza Chicago, IL 60602	William Sholten 312-732-4600 william.sholten@jpmorgan.com	GMAC Mortgage, LLC	Custodial
2626	796677359	JPMORGAN CHASE BANK, N.A.	3rd First National Plaza Chicago, IL 60602	William Sholten 312-732-4600 william.sholten@jpmorgan.com	GMAC Mortgage, LLC	Custodial
2627	796677375	JPMORGAN CHASE BANK, N.A.	3rd First National Plaza Chicago, IL 60602	William Sholten 312-732-4600 william.sholten@jpmorgan.com	GMAC Mortgage, LLC	Custodial
2628	796677383	JPMORGAN CHASE BANK, N.A.	3rd First National Plaza Chicago, IL 60602	William Sholten 312-732-4600 william.sholten@jpmorgan.com	GMAC Mortgage, LLC	Custodial
2629	796677391	JPMORGAN CHASE BANK, N.A.	3rd First National Plaza Chicago, IL 60602	William Sholten 312-732-4600 william.sholten@jpmorgan.com	GMAC Mortgage, LLC	Custodial
2630	796677409	JPMORGAN CHASE BANK, N.A.	3rd First National Plaza Chicago, IL 60602	William Sholten 312-732-4600 william.sholten@jpmorgan.com	GMAC Mortgage, LLC	Custodial
2631	796677417	JPMORGAN CHASE BANK, N.A.	3rd First National Plaza Chicago, IL 60602	William Sholten 312-732-4600 william.sholten@jpmorgan.com	GMAC Mortgage, LLC	Custodial
2632	796677425	JPMORGAN CHASE BANK, N.A.	3rd First National Plaza Chicago, IL 60602	William Sholten 312-732-4600 william.sholten@jpmorgan.com	GMAC Mortgage, LLC	Custodial
2633	796677433	JPMORGAN CHASE BANK, N.A.	3rd First National Plaza Chicago, IL 60602	William Sholten 312-732-4600 william.sholten@jpmorgan.com	GMAC Mortgage, LLC	Custodial
2634	796677441	JPMORGAN CHASE BANK, N.A.	3rd First National Plaza Chicago, IL 60602	William Sholten 312-732-4600 william.sholten@jpmorgan.com	GMAC Mortgage, LLC	Custodial
2635	796677458	JPMORGAN CHASE BANK, N.A.	3rd First National Plaza Chicago, IL 60602	William Sholten 312-732-4600 william.sholten@jpmorgan.com	GMAC Mortgage, LLC	Custodial
2636	796677466	JPMORGAN CHASE BANK, N.A.	3rd First National Plaza Chicago, IL 60602	William Sholten 312-732-4600 william.sholten@jpmorgan.com	GMAC Mortgage, LLC	Custodial
2637	796677474	JPMORGAN CHASE BANK, N.A.	3rd First National Plaza Chicago, IL 60602	William Sholten 312-732-4600 william.sholten@jpmorgan.com	GMAC Mortgage, LLC	Custodial
2638	796677482	JPMORGAN CHASE BANK, N.A.	3rd First National Plaza Chicago, IL 60602	William Sholten 312-732-4600 william.sholten@jpmorgan.com	GMAC Mortgage, LLC	Custodial
2639	796677490	JPMORGAN CHASE BANK, N.A.	3rd First National Plaza Chicago, IL 60602	William Sholten 312-732-4600 william.sholten@jpmorgan.com	GMAC Mortgage, LLC	Custodial
2640	796677508	JPMORGAN CHASE BANK, N.A.	3rd First National Plaza Chicago, IL 60602	William Sholten 312-732-4600 william.sholten@jpmorgan.com	GMAC Mortgage, LLC	Custodial
2641	796677516	JPMORGAN CHASE BANK, N.A.	3rd First National Plaza Chicago, IL 60602	William Sholten 312-732-4600 william.sholten@jpmorgan.com	GMAC Mortgage, LLC	Custodial
2642	796677524	JPMORGAN CHASE BANK, N.A.	3rd First National Plaza Chicago, IL 60602	William Sholten 312-732-4600 william.sholten@jpmorgan.com	GMAC Mortgage, LLC	Custodial
2643	796677540	JPMORGAN CHASE BANK, N.A.	3rd First National Plaza Chicago, IL 60602	William Sholten 312-732-4600 william.sholten@jpmorgan.com	GMAC Mortgage, LLC	Custodial
2644	796677557	JPMORGAN CHASE BANK, N.A.	3rd First National Plaza Chicago, IL 60602	William Sholten 312-732-4600 william.sholten@jpmorgan.com	GMAC Mortgage, LLC	Custodial
2645	796677565	JPMORGAN CHASE BANK, N.A.	3rd First National Plaza Chicago, IL 60602	William Sholten 312-732-4600 william.sholten@jpmorgan.com	GMAC Mortgage, LLC	Custodial
2646	796677573	JPMORGAN CHASE BANK, N.A.	3rd First National Plaza Chicago, IL 60602	William Sholten 312-732-4600 william.sholten@jpmorgan.com	GMAC Mortgage, LLC	Custodial
2647	796677581	JPMORGAN CHASE BANK, N.A.	3rd First National Plaza Chicago, IL 60602	William Sholten 312-732-4600 william.sholten@jpmorgan.com	GMAC Mortgage, LLC	Custodial
2648	796677599	JPMORGAN CHASE BANK, N.A.	3rd First National Plaza Chicago, IL 60602	William Sholten 312-732-4600 william.sholten@jpmorgan.com	GMAC Mortgage, LLC	Custodial
2649	796677607	JPMORGAN CHASE BANK, N.A.	3rd First National Plaza Chicago, IL 60602	William Sholten 312-732-4600 william.sholten@jpmorgan.com	GMAC Mortgage, LLC	Custodial
2650	796677615	JPMORGAN CHASE BANK, N.A.	3rd First National Plaza Chicago, IL 60602	William Sholten 312-732-4600 william.sholten@jpmorgan.com	GMAC Mortgage, LLC	Custodial
2651	796677623	JPMORGAN CHASE BANK, N.A.	3rd First National Plaza Chicago, IL 60602	William Sholten 312-732-4600 william.sholten@jpmorgan.com	GMAC Mortgage, LLC	Custodial
2652	796677631	JPMORGAN CHASE BANK, N.A.	3rd First National Plaza Chicago, IL 60602	William Sholten 312-732-4600 william.sholten@jpmorgan.com	GMAC Mortgage, LLC	Custodial
2653	796677649	JPMORGAN CHASE BANK, N.A.	3rd First National Plaza Chicago, IL 60602	William Sholten 312-732-4600 william.sholten@jpmorgan.com	GMAC Mortgage, LLC	Custodial
2654	796677656	JPMORGAN CHASE BANK, N.A.	3rd First National Plaza Chicago, IL 60602	William Sholten 312-732-4600 william.sholten@jpmorgan.com	GMAC Mortgage, LLC	Custodial
2655	796677664	JPMORGAN CHASE BANK, N.A.	3rd First National Plaza Chicago, IL 60602	William Sholten 312-732-4600 william.sholten@jpmorgan.com	GMAC Mortgage, LLC	Custodial
2656	796677672	JPMORGAN CHASE BANK, N.A.	3rd First National Plaza Chicago, IL 60602	William Sholten 312-732-4600 william.sholten@jpmorgan.com	GMAC Mortgage, LLC	Custodial
2657	796677680	JPMORGAN CHASE BANK, N.A.	3rd First National Plaza Chicago, IL 60602	William Sholten 312-732-4600 william.sholten@jpmorgan.com	GMAC Mortgage, LLC	Custodial
2658	796677698	JPMORGAN CHASE BANK, N.A.	3rd First National Plaza Chicago, IL 60602	William Sholten 312-732-4600 william.sholten@jpmorgan.com	GMAC Mortgage, LLC	Custodial
2659	796677706	JPMORGAN CHASE BANK, N.A.	3rd First National Plaza Chicago, IL 60602	William Sholten 312-732-4600 william.sholten@jpmorgan.com	GMAC Mortgage, LLC	Custodial
2660	796677714	JPMORGAN CHASE BANK, N.A.	3rd First National Plaza Chicago, IL 60602	William Sholten 312-732-4600 william.sholten@jpmorgan.com	GMAC Mortgage, LLC	Custodial
2661	796677722	JPMORGAN CHASE BANK, N.A.	3rd First National Plaza Chicago, IL 60602	William Sholten 312-732-4600 william.sholten@jpmorgan.com	GMAC Mortgage, LLC	Custodial
2662	796677730	JPMORGAN CHASE BANK, N.A.	3rd First National Plaza Chicago, IL 60602	William Sholten 312-732-4600 william.sholten@jpmorgan.com	GMAC Mortgage, LLC	Custodial
2663	796677748	JPMORGAN CHASE BANK, N.A.	3rd First National Plaza Chicago, IL 60602	William Sholten 312-732-4600 william.sholten@jpmorgan.com	GMAC Mortgage, LLC	Custodial
2664	796677755	JPMORGAN CHASE BANK, N.A.	3rd First National Plaza Chicago, IL 60602	William Sholten 312-732-4600 william.sholten@jpmorgan.com	GMAC Mortgage, LLC	Custodial
2665	796677763	JPMORGAN CHASE BANK, N.A.	3rd First National Plaza Chicago, IL 60602	William Sholten 312-732-4600 william.sholten@jpmorgan.com	GMAC Mortgage, LLC	Custodial
2666	796677771	JPMORGAN CHASE BANK, N.A.	3rd First National Plaza Chicago, IL 60602	William Sholten 312-732-4600 william.sholten@jpmorgan.com	GMAC Mortgage, LLC	Custodial

Privileged and Confidential

Exhibit B - Bank Accounts

Ref #	Account Number	Bank	Address	Contact	Corporate/Company Code	Account Type
2667	796677789	JPMORGAN CHASE BANK, N.A.	3rd First National Plaza Chicago, IL 60602	William Sholten 312-732-4600 william.sholten@jpmorgan.com	GMAC Mortgage, LLC	Custodial
2668	796677805	JPMORGAN CHASE BANK, N.A.	3rd First National Plaza Chicago, IL 60602	William Sholten 312-732-4600 william.sholten@jpmorgan.com	GMAC Mortgage, LLC	Custodial
2669	796677813	JPMORGAN CHASE BANK, N.A.	3rd First National Plaza Chicago, IL 60602	William Sholten 312-732-4600 william.sholten@jpmorgan.com	GMAC Mortgage, LLC	Custodial
2670	796677821	JPMORGAN CHASE BANK, N.A.	3rd First National Plaza Chicago, IL 60602	William Sholten 312-732-4600 william.sholten@jpmorgan.com	GMAC Mortgage, LLC	Custodial
2671	796677839	JPMORGAN CHASE BANK, N.A.	3rd First National Plaza Chicago, IL 60602	William Sholten 312-732-4600 william.sholten@jpmorgan.com	GMAC Mortgage, LLC	Custodial
2672	796677847	JPMORGAN CHASE BANK, N.A.	3rd First National Plaza Chicago, IL 60602	William Sholten 312-732-4600 william.sholten@jpmorgan.com	GMAC Mortgage, LLC	Custodial
2673	796677854	JPMORGAN CHASE BANK, N.A.	3rd First National Plaza Chicago, IL 60602	William Sholten 312-732-4600 william.sholten@jpmorgan.com	GMAC Mortgage, LLC	Custodial
2674	796677862	JPMORGAN CHASE BANK, N.A.	3rd First National Plaza Chicago, IL 60602	William Sholten 312-732-4600 william.sholten@jpmorgan.com	GMAC Mortgage, LLC	Custodial
2675	796677870	JPMORGAN CHASE BANK, N.A.	3rd First National Plaza Chicago, IL 60602	William Sholten 312-732-4600 william.sholten@jpmorgan.com	GMAC Mortgage, LLC	Custodial
2676	796677888	JPMORGAN CHASE BANK, N.A.	3rd First National Plaza Chicago, IL 60602	William Sholten 312-732-4600 william.sholten@jpmorgan.com	GMAC Mortgage, LLC	Custodial
2677	796677896	JPMORGAN CHASE BANK, N.A.	3rd First National Plaza Chicago, IL 60602	William Sholten 312-732-4600 william.sholten@jpmorgan.com	GMAC Mortgage, LLC	Custodial
2678	796677904	JPMORGAN CHASE BANK, N.A.	3rd First National Plaza Chicago, IL 60602	William Sholten 312-732-4600 william.sholten@jpmorgan.com	GMAC Mortgage, LLC	Custodial
2679	796677912	JPMORGAN CHASE BANK, N.A.	3rd First National Plaza Chicago, IL 60602	William Sholten 312-732-4600 william.sholten@jpmorgan.com	GMAC Mortgage, LLC	Custodial
2680	796677920	JPMORGAN CHASE BANK, N.A.	3rd First National Plaza Chicago, IL 60602	William Sholten 312-732-4600 william.sholten@jpmorgan.com	GMAC Mortgage, LLC	Custodial
2681	796677938	JPMORGAN CHASE BANK, N.A.	3rd First National Plaza Chicago, IL 60602	William Sholten 312-732-4600 william.sholten@jpmorgan.com	GMAC Mortgage, LLC	Custodial
2682	796677946	JPMORGAN CHASE BANK, N.A.	3rd First National Plaza Chicago, IL 60602	William Sholten 312-732-4600 william.sholten@jpmorgan.com	GMAC Mortgage, LLC	Custodial
2683	796677953	JPMORGAN CHASE BANK, N.A.	3rd First National Plaza Chicago, IL 60602	William Sholten 312-732-4600 william.sholten@jpmorgan.com	GMAC Mortgage, LLC	Custodial
2684	796677961	JPMORGAN CHASE BANK, N.A.	3rd First National Plaza Chicago, IL 60602	William Sholten 312-732-4600 william.sholten@jpmorgan.com	GMAC Mortgage, LLC	Custodial
2685	796677979	JPMORGAN CHASE BANK, N.A.	3rd First National Plaza Chicago, IL 60602	William Sholten 312-732-4600 william.sholten@jpmorgan.com	GMAC Mortgage, LLC	Custodial
2686	796677987	JPMORGAN CHASE BANK, N.A.	3rd First National Plaza Chicago, IL 60602	William Sholten 312-732-4600 william.sholten@jpmorgan.com	GMAC Mortgage, LLC	Custodial
2687	796677995	JPMORGAN CHASE BANK, N.A.	3rd First National Plaza Chicago, IL 60602	William Sholten 312-732-4600 william.sholten@jpmorgan.com	GMAC Mortgage, LLC	Custodial
2688	796678001	JPMORGAN CHASE BANK, N.A.	3rd First National Plaza Chicago, IL 60602	William Sholten 312-732-4600 william.sholten@jpmorgan.com	GMAC Mortgage, LLC	Custodial
2689	796678019	JPMORGAN CHASE BANK, N.A.	3rd First National Plaza Chicago, IL 60602	William Sholten 312-732-4600 william.sholten@jpmorgan.com	GMAC Mortgage, LLC	Custodial
2690	796678027	JPMORGAN CHASE BANK, N.A.	3rd First National Plaza Chicago, IL 60602	William Sholten 312-732-4600 william.sholten@jpmorgan.com	GMAC Mortgage, LLC	Custodial
2691	796678035	JPMORGAN CHASE BANK, N.A.	3rd First National Plaza Chicago, IL 60602	William Sholten 312-732-4600 william.sholten@jpmorgan.com	GMAC Mortgage, LLC	Custodial
2692	796678043	JPMORGAN CHASE BANK, N.A.	3rd First National Plaza Chicago, IL 60602	William Sholten 312-732-4600 william.sholten@jpmorgan.com	GMAC Mortgage, LLC	Custodial
2693	796678050	JPMORGAN CHASE BANK, N.A.	3rd First National Plaza Chicago, IL 60602	William Sholten 312-732-4600 william.sholten@jpmorgan.com	GMAC Mortgage, LLC	Custodial
2694	796678068	JPMORGAN CHASE BANK, N.A.	3rd First National Plaza Chicago, IL 60602	William Sholten 312-732-4600 william.sholten@jpmorgan.com	GMAC Mortgage, LLC	Custodial
2695	796678076	JPMORGAN CHASE BANK, N.A.	3rd First National Plaza Chicago, IL 60602	William Sholten 312-732-4600 william.sholten@jpmorgan.com	GMAC Mortgage, LLC	Custodial
2696	796678084	JPMORGAN CHASE BANK, N.A.	3rd First National Plaza Chicago, IL 60602	William Sholten 312-732-4600 william.sholten@jpmorgan.com	GMAC Mortgage, LLC	Custodial
2697	796678092	JPMORGAN CHASE BANK, N.A.	3rd First National Plaza Chicago, IL 60602	William Sholten 312-732-4600 william.sholten@jpmorgan.com	GMAC Mortgage, LLC	Custodial
2698	796678100	JPMORGAN CHASE BANK, N.A.	3rd First National Plaza Chicago, IL 60602	William Sholten 312-732-4600 william.sholten@jpmorgan.com	GMAC Mortgage, LLC	Custodial
2699	796678118	JPMORGAN CHASE BANK, N.A.	3rd First National Plaza Chicago, IL 60602	William Sholten 312-732-4600 william.sholten@jpmorgan.com	GMAC Mortgage, LLC	Custodial
2700	796678126	JPMORGAN CHASE BANK, N.A.	3rd First National Plaza Chicago, IL 60602	William Sholten 312-732-4600 william.sholten@jpmorgan.com	GMAC Mortgage, LLC	Custodial
2701	796678134	JPMORGAN CHASE BANK, N.A.	3rd First National Plaza Chicago, IL 60602	William Sholten 312-732-4600 william.sholten@jpmorgan.com	GMAC Mortgage, LLC	Custodial
2702	796678142	JPMORGAN CHASE BANK, N.A.	3rd First National Plaza Chicago, IL 60602	William Sholten 312-732-4600 william.sholten@jpmorgan.com	GMAC Mortgage, LLC	Custodial
2703	796678159	JPMORGAN CHASE BANK, N.A.	3rd First National Plaza Chicago, IL 60602	William Sholten 312-732-4600 william.sholten@jpmorgan.com	GMAC Mortgage, LLC	Custodial
2704	796678167	JPMORGAN CHASE BANK, N.A.	3rd First National Plaza Chicago, IL 60602	William Sholten 312-732-4600 william.sholten@jpmorgan.com	GMAC Mortgage, LLC	Custodial
2705	796678175	JPMORGAN CHASE BANK, N.A.	3rd First National Plaza Chicago, IL 60602	William Sholten 312-732-4600 william.sholten@jpmorgan.com	GMAC Mortgage, LLC	Custodial
2706	796678183	JPMORGAN CHASE BANK, N.A.	3rd First National Plaza Chicago, IL 60602	William Sholten 312-732-4600 william.sholten@jpmorgan.com	GMAC Mortgage, LLC	Custodial
2707	796678191	JPMORGAN CHASE BANK, N.A.	3rd First National Plaza Chicago, IL 60602	William Sholten 312-732-4600 william.sholten@jpmorgan.com	GMAC Mortgage, LLC	Custodial
2708	796678209	JPMORGAN CHASE BANK, N.A.	3rd First National Plaza Chicago, IL 60602	William Sholten 312-732-4600 william.sholten@jpmorgan.com	GMAC Mortgage, LLC	Custodial
2709	796678217	JPMORGAN CHASE BANK, N.A.	3rd First National Plaza Chicago, IL 60602	William Sholten 312-732-4600 william.sholten@jpmorgan.com	GMAC Mortgage, LLC	Custodial

Privileged and Confidential

Exhibit B - Bank Accounts

Ref #	Account Number	Bank	Address	Contact	Corporate/Company Code	Account Type
2710	796678225	JPMORGAN CHASE BANK, N.A.	3rd First National Plaza Chicago, IL 60602	William Sholten 312-732-4600 william.sholten@jpmorgan.com	GMAC Mortgage, LLC	Custodial
2711	796678233	JPMORGAN CHASE BANK, N.A.	3rd First National Plaza Chicago, IL 60602	William Sholten 312-732-4600 william.sholten@jpmorgan.com	GMAC Mortgage, LLC	Custodial
2712	796678241	JPMORGAN CHASE BANK, N.A.	3rd First National Plaza Chicago, IL 60602	William Sholten 312-732-4600 william.sholten@jpmorgan.com	GMAC Mortgage, LLC	Custodial
2713	796678258	JPMORGAN CHASE BANK, N.A.	3rd First National Plaza Chicago, IL 60602	William Sholten 312-732-4600 william.sholten@jpmorgan.com	GMAC Mortgage, LLC	Custodial
2714	796678266	JPMORGAN CHASE BANK, N.A.	3rd First National Plaza Chicago, IL 60602	William Sholten 312-732-4600 william.sholten@jpmorgan.com	GMAC Mortgage, LLC	Custodial
2715	796678274	JPMORGAN CHASE BANK, N.A.	3rd First National Plaza Chicago, IL 60602	William Sholten 312-732-4600 william.sholten@jpmorgan.com	GMAC Mortgage, LLC	Custodial
2716	796678282	JPMORGAN CHASE BANK, N.A.	3rd First National Plaza Chicago, IL 60602	William Sholten 312-732-4600 william.sholten@jpmorgan.com	GMAC Mortgage, LLC	Custodial
2717	796678290	JPMORGAN CHASE BANK, N.A.	3rd First National Plaza Chicago, IL 60602	William Sholten 312-732-4600 william.sholten@jpmorgan.com	GMAC Mortgage, LLC	Custodial
2718	796678308	JPMORGAN CHASE BANK, N.A.	3rd First National Plaza Chicago, IL 60602	William Sholten 312-732-4600 william.sholten@jpmorgan.com	GMAC Mortgage, LLC	Custodial
2719	796678316	JPMORGAN CHASE BANK, N.A.	3rd First National Plaza Chicago, IL 60602	William Sholten 312-732-4600 william.sholten@jpmorgan.com	GMAC Mortgage, LLC	Custodial
2720	796678324	JPMORGAN CHASE BANK, N.A.	3rd First National Plaza Chicago, IL 60602	William Sholten 312-732-4600 william.sholten@jpmorgan.com	GMAC Mortgage, LLC	Custodial
2721	796678332	JPMORGAN CHASE BANK, N.A.	3rd First National Plaza Chicago, IL 60602	William Sholten 312-732-4600 william.sholten@jpmorgan.com	GMAC Mortgage, LLC	Custodial
2722	796678340	JPMORGAN CHASE BANK, N.A.	3rd First National Plaza Chicago, IL 60602	William Sholten 312-732-4600 william.sholten@jpmorgan.com	GMAC Mortgage, LLC	Custodial
2723	796678357	JPMORGAN CHASE BANK, N.A.	3rd First National Plaza Chicago, IL 60602	William Sholten 312-732-4600 william.sholten@jpmorgan.com	GMAC Mortgage, LLC	Custodial
2724	796678365	JPMORGAN CHASE BANK, N.A.	3rd First National Plaza Chicago, IL 60602	William Sholten 312-732-4600 william.sholten@jpmorgan.com	GMAC Mortgage, LLC	Custodial
2725	796678373	JPMORGAN CHASE BANK, N.A.	3rd First National Plaza Chicago, IL 60602	William Sholten 312-732-4600 william.sholten@jpmorgan.com	GMAC Mortgage, LLC	Custodial
2726	796678381	JPMORGAN CHASE BANK, N.A.	3rd First National Plaza Chicago, IL 60602	William Sholten 312-732-4600 william.sholten@jpmorgan.com	GMAC Mortgage, LLC	Custodial
2727	796678399	JPMORGAN CHASE BANK, N.A.	3rd First National Plaza Chicago, IL 60602	William Sholten 312-732-4600 william.sholten@jpmorgan.com	GMAC Mortgage, LLC	Custodial
2728	796678407	JPMORGAN CHASE BANK, N.A.	3rd First National Plaza Chicago, IL 60602	William Sholten 312-732-4600 william.sholten@jpmorgan.com	GMAC Mortgage, LLC	Custodial
2729	796678415	JPMORGAN CHASE BANK, N.A.	3rd First National Plaza Chicago, IL 60602	William Sholten 312-732-4600 william.sholten@jpmorgan.com	GMAC Mortgage, LLC	Custodial
2730	796678423	JPMORGAN CHASE BANK, N.A.	3rd First National Plaza Chicago, IL 60602	William Sholten 312-732-4600 william.sholten@jpmorgan.com	GMAC Mortgage, LLC	Custodial
2731	796678431	JPMORGAN CHASE BANK, N.A.	3rd First National Plaza Chicago, IL 60602	William Sholten 312-732-4600 william.sholten@jpmorgan.com	GMAC Mortgage, LLC	Custodial
2732	796678449	JPMORGAN CHASE BANK, N.A.	3rd First National Plaza Chicago, IL 60602	William Sholten 312-732-4600 william.sholten@jpmorgan.com	GMAC Mortgage, LLC	Custodial
2733	796678456	JPMORGAN CHASE BANK, N.A.	3rd First National Plaza Chicago, IL 60602	William Sholten 312-732-4600 william.sholten@jpmorgan.com	GMAC Mortgage, LLC	Custodial
2734	796678464	JPMORGAN CHASE BANK, N.A.	3rd First National Plaza Chicago, IL 60602	William Sholten 312-732-4600 william.sholten@jpmorgan.com	GMAC Mortgage, LLC	Custodial
2735	796678472	JPMORGAN CHASE BANK, N.A.	3rd First National Plaza Chicago, IL 60602	William Sholten 312-732-4600 william.sholten@jpmorgan.com	GMAC Mortgage, LLC	Custodial
2736	796678480	JPMORGAN CHASE BANK, N.A.	3rd First National Plaza Chicago, IL 60602	William Sholten 312-732-4600 william.sholten@jpmorgan.com	GMAC Mortgage, LLC	Custodial
2737	796678498	JPMORGAN CHASE BANK, N.A.	3rd First National Plaza Chicago, IL 60602	William Sholten 312-732-4600 william.sholten@jpmorgan.com	GMAC Mortgage, LLC	Custodial
2738	796678506	JPMORGAN CHASE BANK, N.A.	3rd First National Plaza Chicago, IL 60602	William Sholten 312-732-4600 william.sholten@jpmorgan.com	GMAC Mortgage, LLC	Custodial
2739	796678514	JPMORGAN CHASE BANK, N.A.	3rd First National Plaza Chicago, IL 60602	William Sholten 312-732-4600 william.sholten@jpmorgan.com	GMAC Mortgage, LLC	Custodial
2740	796678522	JPMORGAN CHASE BANK, N.A.	3rd First National Plaza Chicago, IL 60602	William Sholten 312-732-4600 william.sholten@jpmorgan.com	GMAC Mortgage, LLC	Custodial
2741	796678530	JPMORGAN CHASE BANK, N.A.	3rd First National Plaza Chicago, IL 60602	William Sholten 312-732-4600 william.sholten@jpmorgan.com	GMAC Mortgage, LLC	Custodial
2742	796678548	JPMORGAN CHASE BANK, N.A.	3rd First National Plaza Chicago, IL 60602	William Sholten 312-732-4600 william.sholten@jpmorgan.com	GMAC Mortgage, LLC	Custodial
2743	796678555	JPMORGAN CHASE BANK, N.A.	3rd First National Plaza Chicago, IL 60602	William Sholten 312-732-4600 william.sholten@jpmorgan.com	GMAC Mortgage, LLC	Custodial
2744	796678563	JPMORGAN CHASE BANK, N.A.	3rd First National Plaza Chicago, IL 60602	William Sholten 312-732-4600 william.sholten@jpmorgan.com	GMAC Mortgage, LLC	Custodial
2745	796678571	JPMORGAN CHASE BANK, N.A.	3rd First National Plaza Chicago, IL 60602	William Sholten 312-732-4600 william.sholten@jpmorgan.com	GMAC Mortgage, LLC	Custodial
2746	796678589	JPMORGAN CHASE BANK, N.A.	3rd First National Plaza Chicago, IL 60602	William Sholten 312-732-4600 william.sholten@jpmorgan.com	GMAC Mortgage, LLC	Custodial
2747	796678597	JPMORGAN CHASE BANK, N.A.	3rd First National Plaza Chicago, IL 60602	William Sholten 312-732-4600 william.sholten@jpmorgan.com	GMAC Mortgage, LLC	Custodial
2748	796678605	JPMORGAN CHASE BANK, N.A.	3rd First National Plaza Chicago, IL 60602	William Sholten 312-732-4600 william.sholten@jpmorgan.com	GMAC Mortgage, LLC	Custodial
2749	796678613	JPMORGAN CHASE BANK, N.A.	3rd First National Plaza Chicago, IL 60602	William Sholten 312-732-4600 william.sholten@jpmorgan.com	GMAC Mortgage, LLC	Custodial
2750	796678621	JPMORGAN CHASE BANK, N.A.	3rd First National Plaza Chicago, IL 60602	William Sholten 312-732-4600 william.sholten@jpmorgan.com	GMAC Mortgage, LLC	Custodial
2751	796678639	JPMORGAN CHASE BANK, N.A.	3rd First National Plaza Chicago, IL 60602	William Sholten 312-732-4600 william.sholten@jpmorgan.com	GMAC Mortgage, LLC	Custodial
2752	796678647	JPMORGAN CHASE BANK, N.A.	3rd First National Plaza Chicago, IL 60602	William Sholten 312-732-4600 william.sholten@jpmorgan.com	GMAC Mortgage, LLC	Custodial

Privileged and Confidential

Exhibit B - Bank Accounts

Ref #	Account Number	Bank	Address	Contact	Corporate/Company Code	Account Type
2753	796678654	JPMORGAN CHASE BANK, N.A.	3rd First National Plaza Chicago, IL 60602	William Sholten 312-732-4600 william.sholten@jpmorgan.com	GMAC Mortgage, LLC	Custodial
2754	796678662	JPMORGAN CHASE BANK, N.A.	3rd First National Plaza Chicago, IL 60602	William Sholten 312-732-4600 william.sholten@jpmorgan.com	GMAC Mortgage, LLC	Custodial
2755	796678670	JPMORGAN CHASE BANK, N.A.	3rd First National Plaza Chicago, IL 60602	William Sholten 312-732-4600 william.sholten@jpmorgan.com	GMAC Mortgage, LLC	Custodial
2756	796678688	JPMORGAN CHASE BANK, N.A.	3rd First National Plaza Chicago, IL 60602	William Sholten 312-732-4600 william.sholten@jpmorgan.com	GMAC Mortgage, LLC	Custodial
2757	796678696	JPMORGAN CHASE BANK, N.A.	3rd First National Plaza Chicago, IL 60602	William Sholten 312-732-4600 william.sholten@jpmorgan.com	GMAC Mortgage, LLC	Custodial
2758	796678704	JPMORGAN CHASE BANK, N.A.	3rd First National Plaza Chicago, IL 60602	William Sholten 312-732-4600 william.sholten@jpmorgan.com	GMAC Mortgage, LLC	Custodial
2759	796678712	JPMORGAN CHASE BANK, N.A.	3rd First National Plaza Chicago, IL 60602	William Sholten 312-732-4600 william.sholten@jpmorgan.com	GMAC Mortgage, LLC	Custodial
2760	796678720	JPMORGAN CHASE BANK, N.A.	3rd First National Plaza Chicago, IL 60602	William Sholten 312-732-4600 william.sholten@jpmorgan.com	GMAC Mortgage, LLC	Custodial
2761	796678738	JPMORGAN CHASE BANK, N.A.	3rd First National Plaza Chicago, IL 60602	William Sholten 312-732-4600 william.sholten@jpmorgan.com	GMAC Mortgage, LLC	Custodial
2762	796678746	JPMORGAN CHASE BANK, N.A.	3rd First National Plaza Chicago, IL 60602	William Sholten 312-732-4600 william.sholten@jpmorgan.com	GMAC Mortgage, LLC	Custodial
2763	796678753	JPMORGAN CHASE BANK, N.A.	3rd First National Plaza Chicago, IL 60602	William Sholten 312-732-4600 william.sholten@jpmorgan.com	GMAC Mortgage, LLC	Custodial
2764	796678761	JPMORGAN CHASE BANK, N.A.	3rd First National Plaza Chicago, IL 60602	William Sholten 312-732-4600 william.sholten@jpmorgan.com	GMAC Mortgage, LLC	Custodial
2765	796678779	JPMORGAN CHASE BANK, N.A.	3rd First National Plaza Chicago, IL 60602	William Sholten 312-732-4600 william.sholten@jpmorgan.com	GMAC Mortgage, LLC	Custodial
2766	796678787	JPMORGAN CHASE BANK, N.A.	3rd First National Plaza Chicago, IL 60602	William Sholten 312-732-4600 william.sholten@jpmorgan.com	GMAC Mortgage, LLC	Custodial
2767	796678795	JPMORGAN CHASE BANK, N.A.	3rd First National Plaza Chicago, IL 60602	William Sholten 312-732-4600 william.sholten@jpmorgan.com	GMAC Mortgage, LLC	Custodial
2768	796678803	JPMORGAN CHASE BANK, N.A.	3rd First National Plaza Chicago, IL 60602	William Sholten 312-732-4600 william.sholten@jpmorgan.com	GMAC Mortgage, LLC	Custodial
2769	796678811	JPMORGAN CHASE BANK, N.A.	3rd First National Plaza Chicago, IL 60602	William Sholten 312-732-4600 william.sholten@jpmorgan.com	GMAC Mortgage, LLC	Custodial
2770	796678829	JPMORGAN CHASE BANK, N.A.	3rd First National Plaza Chicago, IL 60602	William Sholten 312-732-4600 william.sholten@jpmorgan.com	GMAC Mortgage, LLC	Custodial
2771	796678837	JPMORGAN CHASE BANK, N.A.	3rd First National Plaza Chicago, IL 60602	William Sholten 312-732-4600 william.sholten@jpmorgan.com	GMAC Mortgage, LLC	Custodial
2772	796678845	JPMORGAN CHASE BANK, N.A.	3rd First National Plaza Chicago, IL 60602	William Sholten 312-732-4600 william.sholten@jpmorgan.com	GMAC Mortgage, LLC	Custodial
2773	796678852	JPMORGAN CHASE BANK, N.A.	3rd First National Plaza Chicago, IL 60602	William Sholten 312-732-4600 william.sholten@jpmorgan.com	GMAC Mortgage, LLC	Custodial
2774	796678860	JPMORGAN CHASE BANK, N.A.	3rd First National Plaza Chicago, IL 60602	William Sholten 312-732-4600 william.sholten@jpmorgan.com	GMAC Mortgage, LLC	Custodial
2775	796678878	JPMORGAN CHASE BANK, N.A.	3rd First National Plaza Chicago, IL 60602	William Sholten 312-732-4600 william.sholten@jpmorgan.com	GMAC Mortgage, LLC	Custodial
2776	796678886	JPMORGAN CHASE BANK, N.A.	3rd First National Plaza Chicago, IL 60602	William Sholten 312-732-4600 william.sholten@jpmorgan.com	GMAC Mortgage, LLC	Custodial
2777	796678894	JPMORGAN CHASE BANK, N.A.	3rd First National Plaza Chicago, IL 60602	William Sholten 312-732-4600 william.sholten@jpmorgan.com	GMAC Mortgage, LLC	Custodial
2778	796678902	JPMORGAN CHASE BANK, N.A.	3rd First National Plaza Chicago, IL 60602	William Sholten 312-732-4600 william.sholten@jpmorgan.com	GMAC Mortgage, LLC	Custodial
2779	796678910	JPMORGAN CHASE BANK, N.A.	3rd First National Plaza Chicago, IL 60602	William Sholten 312-732-4600 william.sholten@jpmorgan.com	GMAC Mortgage, LLC	Custodial
2780	796678928	JPMORGAN CHASE BANK, N.A.	3rd First National Plaza Chicago, IL 60602	William Sholten 312-732-4600 william.sholten@jpmorgan.com	GMAC Mortgage, LLC	Custodial
2781	796678936	JPMORGAN CHASE BANK, N.A.	3rd First National Plaza Chicago, IL 60602	William Sholten 312-732-4600 william.sholten@jpmorgan.com	GMAC Mortgage, LLC	Custodial
2782	796678944	JPMORGAN CHASE BANK, N.A.	3rd First National Plaza Chicago, IL 60602	William Sholten 312-732-4600 william.sholten@jpmorgan.com	GMAC Mortgage, LLC	Custodial
2783	796678951	JPMORGAN CHASE BANK, N.A.	3rd First National Plaza Chicago, IL 60602	William Sholten 312-732-4600 william.sholten@jpmorgan.com	GMAC Mortgage, LLC	Custodial
2784	796678969	JPMORGAN CHASE BANK, N.A.	3rd First National Plaza Chicago, IL 60602	William Sholten 312-732-4600 william.sholten@jpmorgan.com	GMAC Mortgage, LLC	Custodial
2785	796678977	JPMORGAN CHASE BANK, N.A.	3rd First National Plaza Chicago, IL 60602	William Sholten 312-732-4600 william.sholten@jpmorgan.com	GMAC Mortgage, LLC	Custodial
2786	796678985	JPMORGAN CHASE BANK, N.A.	3rd First National Plaza Chicago, IL 60602	William Sholten 312-732-4600 william.sholten@jpmorgan.com	GMAC Mortgage, LLC	Custodial
2787	796678993	JPMORGAN CHASE BANK, N.A.	3rd First National Plaza Chicago, IL 60602	William Sholten 312-732-4600 william.sholten@jpmorgan.com	GMAC Mortgage, LLC	Custodial
2788	796679009	JPMORGAN CHASE BANK, N.A.	3rd First National Plaza Chicago, IL 60602	William Sholten 312-732-4600 william.sholten@jpmorgan.com	GMAC Mortgage, LLC	Custodial
2789	796679017	JPMORGAN CHASE BANK, N.A.	3rd First National Plaza Chicago, IL 60602	William Sholten 312-732-4600 william.sholten@jpmorgan.com	GMAC Mortgage, LLC	Custodial
2790	796679025	JPMORGAN CHASE BANK, N.A.	3rd First National Plaza Chicago, IL 60602	William Sholten 312-732-4600 william.sholten@jpmorgan.com	GMAC Mortgage, LLC	Custodial
2791	796679033	JPMORGAN CHASE BANK, N.A.	3rd First National Plaza Chicago, IL 60602	William Sholten 312-732-4600 william.sholten@jpmorgan.com	GMAC Mortgage, LLC	Custodial
2792	796679041	JPMORGAN CHASE BANK, N.A.	3rd First National Plaza Chicago, IL 60602	William Sholten 312-732-4600 william.sholten@jpmorgan.com	GMAC Mortgage, LLC	Custodial
2793	796679058	JPMORGAN CHASE BANK, N.A.	3rd First National Plaza Chicago, IL 60602	William Sholten 312-732-4600 william.sholten@jpmorgan.com	GMAC Mortgage, LLC	Custodial
2794	796679066	JPMORGAN CHASE BANK, N.A.	3rd First National Plaza Chicago, IL 60602	William Sholten 312-732-4600 william.sholten@jpmorgan.com	GMAC Mortgage, LLC	Custodial
2795	796679074	JPMORGAN CHASE BANK, N.A.	3rd First National Plaza Chicago, IL 60602	William Sholten 312-732-4600 william.sholten@jpmorgan.com	GMAC Mortgage, LLC	Custodial

Privileged and Confidential

Exhibit B - Bank Accounts

Ref #	Account Number	Bank	Address	Contact	Corporate/Company Code	Account Type
2796	796679082	JPMORGAN CHASE BANK, N.A.	3rd First National Plaza Chicago, IL 60602	William Sholten 312-732-4600 william.sholten@jpmorgan.com	GMAC Mortgage, LLC	Custodial
2797	796679090	JPMORGAN CHASE BANK, N.A.	3rd First National Plaza Chicago, IL 60602	William Sholten 312-732-4600 william.sholten@jpmorgan.com	GMAC Mortgage, LLC	Custodial
2798	796679108	JPMORGAN CHASE BANK, N.A.	3rd First National Plaza Chicago, IL 60602	William Sholten 312-732-4600 william.sholten@jpmorgan.com	GMAC Mortgage, LLC	Custodial
2799	796679116	JPMORGAN CHASE BANK, N.A.	3rd First National Plaza Chicago, IL 60602	William Sholten 312-732-4600 william.sholten@jpmorgan.com	GMAC Mortgage, LLC	Custodial
2800	796679132	JPMORGAN CHASE BANK, N.A.	3rd First National Plaza Chicago, IL 60602	William Sholten 312-732-4600 william.sholten@jpmorgan.com	GMAC Mortgage, LLC	Custodial
2801	796679140	JPMORGAN CHASE BANK, N.A.	3rd First National Plaza Chicago, IL 60602	William Sholten 312-732-4600 william.sholten@jpmorgan.com	GMAC Mortgage, LLC	Custodial
2802	796679157	JPMORGAN CHASE BANK, N.A.	3rd First National Plaza Chicago, IL 60602	William Sholten 312-732-4600 william.sholten@jpmorgan.com	GMAC Mortgage, LLC	Custodial
2803	796679165	JPMORGAN CHASE BANK, N.A.	3rd First National Plaza Chicago, IL 60602	William Sholten 312-732-4600 william.sholten@jpmorgan.com	GMAC Mortgage, LLC	Custodial
2804	796679173	JPMORGAN CHASE BANK, N.A.	3rd First National Plaza Chicago, IL 60602	William Sholten 312-732-4600 william.sholten@jpmorgan.com	GMAC Mortgage, LLC	Custodial
2805	796679181	JPMORGAN CHASE BANK, N.A.	3rd First National Plaza Chicago, IL 60602	William Sholten 312-732-4600 william.sholten@jpmorgan.com	GMAC Mortgage, LLC	Custodial
2806	796679199	JPMORGAN CHASE BANK, N.A.	3rd First National Plaza Chicago, IL 60602	William Sholten 312-732-4600 william.sholten@jpmorgan.com	GMAC Mortgage, LLC	Custodial
2807	796679207	JPMORGAN CHASE BANK, N.A.	3rd First National Plaza Chicago, IL 60602	William Sholten 312-732-4600 william.sholten@jpmorgan.com	GMAC Mortgage, LLC	Custodial
2808	796679215	JPMORGAN CHASE BANK, N.A.	3rd First National Plaza Chicago, IL 60602	William Sholten 312-732-4600 william.sholten@jpmorgan.com	GMAC Mortgage, LLC	Custodial
2809	796679223	JPMORGAN CHASE BANK, N.A.	3rd First National Plaza Chicago, IL 60602	William Sholten 312-732-4600 william.sholten@jpmorgan.com	GMAC Mortgage, LLC	Custodial
2810	796679231	JPMORGAN CHASE BANK, N.A.	3rd First National Plaza Chicago, IL 60602	William Sholten 312-732-4600 william.sholten@jpmorgan.com	GMAC Mortgage, LLC	Custodial
2811	796679249	JPMORGAN CHASE BANK, N.A.	3rd First National Plaza Chicago, IL 60602	William Sholten 312-732-4600 william.sholten@jpmorgan.com	GMAC Mortgage, LLC	Custodial
2812	796679256	JPMORGAN CHASE BANK, N.A.	3rd First National Plaza Chicago, IL 60602	William Sholten 312-732-4600 william.sholten@jpmorgan.com	GMAC Mortgage, LLC	Custodial
2813	796679264	JPMORGAN CHASE BANK, N.A.	3rd First National Plaza Chicago, IL 60602	William Sholten 312-732-4600 william.sholten@jpmorgan.com	GMAC Mortgage, LLC	Custodial
2814	796679272	JPMORGAN CHASE BANK, N.A.	3rd First National Plaza Chicago, IL 60602	William Sholten 312-732-4600 william.sholten@jpmorgan.com	GMAC Mortgage, LLC	Custodial
2815	796679280	JPMORGAN CHASE BANK, N.A.	3rd First National Plaza Chicago, IL 60602	William Sholten 312-732-4600 william.sholten@jpmorgan.com	GMAC Mortgage, LLC	Custodial
2816	796679298	JPMORGAN CHASE BANK, N.A.	3rd First National Plaza Chicago, IL 60602	William Sholten 312-732-4600 william.sholten@jpmorgan.com	GMAC Mortgage, LLC	Custodial
2817	796679306	JPMORGAN CHASE BANK, N.A.	3rd First National Plaza Chicago, IL 60602	William Sholten 312-732-4600 william.sholten@jpmorgan.com	GMAC Mortgage, LLC	Custodial
2818	796679314	JPMORGAN CHASE BANK, N.A.	3rd First National Plaza Chicago, IL 60602	William Sholten 312-732-4600 william.sholten@jpmorgan.com	GMAC Mortgage, LLC	Custodial
2819	796679322	JPMORGAN CHASE BANK, N.A.	3rd First National Plaza Chicago, IL 60602	William Sholten 312-732-4600 william.sholten@jpmorgan.com	GMAC Mortgage, LLC	Custodial
2820	796679330	JPMORGAN CHASE BANK, N.A.	3rd First National Plaza Chicago, IL 60602	William Sholten 312-732-4600 william.sholten@jpmorgan.com	GMAC Mortgage, LLC	Custodial
2821	796679348	JPMORGAN CHASE BANK, N.A.	3rd First National Plaza Chicago, IL 60602	William Sholten 312-732-4600 william.sholten@jpmorgan.com	GMAC Mortgage, LLC	Custodial
2822	796679355	JPMORGAN CHASE BANK, N.A.	3rd First National Plaza Chicago, IL 60602	William Sholten 312-732-4600 william.sholten@jpmorgan.com	GMAC Mortgage, LLC	Custodial
2823	796679363	JPMORGAN CHASE BANK, N.A.	3rd First National Plaza Chicago, IL 60602	William Sholten 312-732-4600 william.sholten@jpmorgan.com	GMAC Mortgage, LLC	Custodial
2824	796679371	JPMORGAN CHASE BANK, N.A.	3rd First National Plaza Chicago, IL 60602	William Sholten 312-732-4600 william.sholten@jpmorgan.com	GMAC Mortgage, LLC	Custodial
2825	796679389	JPMORGAN CHASE BANK, N.A.	3rd First National Plaza Chicago, IL 60602	William Sholten 312-732-4600 william.sholten@jpmorgan.com	GMAC Mortgage, LLC	Custodial
2826	796679397	JPMORGAN CHASE BANK, N.A.	3rd First National Plaza Chicago, IL 60602	William Sholten 312-732-4600 william.sholten@jpmorgan.com	GMAC Mortgage, LLC	Custodial
2827	796679405	JPMORGAN CHASE BANK, N.A.	3rd First National Plaza Chicago, IL 60602	William Sholten 312-732-4600 william.sholten@jpmorgan.com	GMAC Mortgage, LLC	Custodial
2828	796679413	JPMORGAN CHASE BANK, N.A.	3rd First National Plaza Chicago, IL 60602	William Sholten 312-732-4600 william.sholten@jpmorgan.com	GMAC Mortgage, LLC	Custodial
2829	796679421	JPMORGAN CHASE BANK, N.A.	3rd First National Plaza Chicago, IL 60602	William Sholten 312-732-4600 william.sholten@jpmorgan.com	GMAC Mortgage, LLC	Custodial
2830	796679439	JPMORGAN CHASE BANK, N.A.	3rd First National Plaza Chicago, IL 60602	William Sholten 312-732-4600 william.sholten@jpmorgan.com	GMAC Mortgage, LLC	Custodial
2831	796679447	JPMORGAN CHASE BANK, N.A.	3rd First National Plaza Chicago, IL 60602	William Sholten 312-732-4600 william.sholten@jpmorgan.com	GMAC Mortgage, LLC	Custodial
2832	796679454	JPMORGAN CHASE BANK, N.A.	3rd First National Plaza Chicago, IL 60602	William Sholten 312-732-4600 william.sholten@jpmorgan.com	GMAC Mortgage, LLC	Custodial
2833	796679462	JPMORGAN CHASE BANK, N.A.	3rd First National Plaza Chicago, IL 60602	William Sholten 312-732-4600 william.sholten@jpmorgan.com	GMAC Mortgage, LLC	Custodial
2834	796679470	JPMORGAN CHASE BANK, N.A.	3rd First National Plaza Chicago, IL 60602	William Sholten 312-732-4600 william.sholten@jpmorgan.com	GMAC Mortgage, LLC	Custodial
2835	796679488	JPMORGAN CHASE BANK, N.A.	3rd First National Plaza Chicago, IL 60602	William Sholten 312-732-4600 william.sholten@jpmorgan.com	GMAC Mortgage, LLC	Custodial
2836	796679496	JPMORGAN CHASE BANK, N.A.	3rd First National Plaza Chicago, IL 60602	William Sholten 312-732-4600 william.sholten@jpmorgan.com	GMAC Mortgage, LLC	Custodial
2837	796679504	JPMORGAN CHASE BANK, N.A.	3rd First National Plaza Chicago, IL 60602	William Sholten 312-732-4600 william.sholten@jpmorgan.com	GMAC Mortgage, LLC	Custodial
2838	796679512	JPMORGAN CHASE BANK, N.A.	3rd First National Plaza Chicago, IL 60602	William Sholten 312-732-4600 william.sholten@jpmorgan.com	GMAC Mortgage, LLC	Custodial

Privileged and Confidential

Exhibit B - Bank Accounts

Ref #	Account Number	Bank	Address	Contact	Corporate/Company Code	Account Type
2839	796679520	JPMORGAN CHASE BANK, N.A.	3rd First National Plaza Chicago, IL 60602	William Sholten 312-732-4600 william.sholten@jpmorgan.com	GMAC Mortgage, LLC	Custodial
2840	796679538	JPMORGAN CHASE BANK, N.A.	3rd First National Plaza Chicago, IL 60602	William Sholten 312-732-4600 william.sholten@jpmorgan.com	GMAC Mortgage, LLC	Custodial
2841	796679546	JPMORGAN CHASE BANK, N.A.	3rd First National Plaza Chicago, IL 60602	William Sholten 312-732-4600 william.sholten@jpmorgan.com	GMAC Mortgage, LLC	Custodial
2842	796679553	JPMORGAN CHASE BANK, N.A.	3rd First National Plaza Chicago, IL 60602	William Sholten 312-732-4600 william.sholten@jpmorgan.com	GMAC Mortgage, LLC	Custodial
2843	796679561	JPMORGAN CHASE BANK, N.A.	3rd First National Plaza Chicago, IL 60602	William Sholten 312-732-4600 william.sholten@jpmorgan.com	GMAC Mortgage, LLC	Custodial
2844	796679603	JPMORGAN CHASE BANK, N.A.	3rd First National Plaza Chicago, IL 60602	William Sholten 312-732-4600 william.sholten@jpmorgan.com	GMAC Mortgage, LLC	Custodial
2845	796679611	JPMORGAN CHASE BANK, N.A.	3rd First National Plaza Chicago, IL 60602	William Sholten 312-732-4600 william.sholten@jpmorgan.com	GMAC Mortgage, LLC	Custodial
2846	796679652	JPMORGAN CHASE BANK, N.A.	3rd First National Plaza Chicago, IL 60602	William Sholten 312-732-4600 william.sholten@jpmorgan.com	GMAC Mortgage, LLC	Custodial
2847	796679660	JPMORGAN CHASE BANK, N.A.	3rd First National Plaza Chicago, IL 60602	William Sholten 312-732-4600 william.sholten@jpmorgan.com	GMAC Mortgage, LLC	Custodial
2848	796679678	JPMORGAN CHASE BANK, N.A.	3rd First National Plaza Chicago, IL 60602	William Sholten 312-732-4600 william.sholten@jpmorgan.com	GMAC Mortgage, LLC	Custodial
2849	796679686	JPMORGAN CHASE BANK, N.A.	3rd First National Plaza Chicago, IL 60602	William Sholten 312-732-4600 william.sholten@jpmorgan.com	GMAC Mortgage, LLC	Custodial
2850	796679694	JPMORGAN CHASE BANK, N.A.	3rd First National Plaza Chicago, IL 60602	William Sholten 312-732-4600 william.sholten@jpmorgan.com	GMAC Mortgage, LLC	Custodial
2851	796679702	JPMORGAN CHASE BANK, N.A.	3rd First National Plaza Chicago, IL 60602	William Sholten 312-732-4600 william.sholten@jpmorgan.com	GMAC Mortgage, LLC	Custodial
2852	796679710	JPMORGAN CHASE BANK, N.A.	3rd First National Plaza Chicago, IL 60602	William Sholten 312-732-4600 william.sholten@jpmorgan.com	GMAC Mortgage, LLC	Custodial
2853	796679728	JPMORGAN CHASE BANK, N.A.	3rd First National Plaza Chicago, IL 60602	William Sholten 312-732-4600 william.sholten@jpmorgan.com	GMAC Mortgage, LLC	Custodial
2854	796679736	JPMORGAN CHASE BANK, N.A.	3rd First National Plaza Chicago, IL 60602	William Sholten 312-732-4600 william.sholten@jpmorgan.com	GMAC Mortgage, LLC	Custodial
2855	796679744	JPMORGAN CHASE BANK, N.A.	3rd First National Plaza Chicago, IL 60602	William Sholten 312-732-4600 william.sholten@jpmorgan.com	GMAC Mortgage, LLC	Custodial
2856	796679769	JPMORGAN CHASE BANK, N.A.	3rd First National Plaza Chicago, IL 60602	William Sholten 312-732-4600 william.sholten@jpmorgan.com	GMAC Mortgage, LLC	Custodial
2857	796679785	JPMORGAN CHASE BANK, N.A.	3rd First National Plaza Chicago, IL 60602	William Sholten 312-732-4600 william.sholten@jpmorgan.com	GMAC Mortgage, LLC	Custodial
2858	796679793	JPMORGAN CHASE BANK, N.A.	3rd First National Plaza Chicago, IL 60602	William Sholten 312-732-4600 william.sholten@jpmorgan.com	GMAC Mortgage, LLC	Custodial
2859	796679835	JPMORGAN CHASE BANK, N.A.	3rd First National Plaza Chicago, IL 60602	William Sholten 312-732-4600 william.sholten@jpmorgan.com	GMAC Mortgage, LLC	Custodial
2860	796679843	JPMORGAN CHASE BANK, N.A.	3rd First National Plaza Chicago, IL 60602	William Sholten 312-732-4600 william.sholten@jpmorgan.com	GMAC Mortgage, LLC	Custodial
2861	796679850	JPMORGAN CHASE BANK, N.A.	3rd First National Plaza Chicago, IL 60602	William Sholten 312-732-4600 william.sholten@jpmorgan.com	GMAC Mortgage, LLC	Custodial
2862	796679884	JPMORGAN CHASE BANK, N.A.	3rd First National Plaza Chicago, IL 60602	William Sholten 312-732-4600 william.sholten@jpmorgan.com	GMAC Mortgage, LLC	Custodial
2863	796679892	JPMORGAN CHASE BANK, N.A.	3rd First National Plaza Chicago, IL 60602	William Sholten 312-732-4600 william.sholten@jpmorgan.com	GMAC Mortgage, LLC	Custodial
2864	796679900	JPMORGAN CHASE BANK, N.A.	3rd First National Plaza Chicago, IL 60602	William Sholten 312-732-4600 william.sholten@jpmorgan.com	GMAC Mortgage, LLC	Custodial
2865	796679918	JPMORGAN CHASE BANK, N.A.	3rd First National Plaza Chicago, IL 60602	William Sholten 312-732-4600 william.sholten@jpmorgan.com	GMAC Mortgage, LLC	Custodial
2866	796679926	JPMORGAN CHASE BANK, N.A.	3rd First National Plaza Chicago, IL 60602	William Sholten 312-732-4600 william.sholten@jpmorgan.com	GMAC Mortgage, LLC	Custodial
2867	796679934	JPMORGAN CHASE BANK, N.A.	3rd First National Plaza Chicago, IL 60602	William Sholten 312-732-4600 william.sholten@jpmorgan.com	GMAC Mortgage, LLC	Custodial
2868	796679943	JPMORGAN CHASE BANK, N.A.	3rd First National Plaza Chicago, IL 60602	William Sholten 312-732-4600 william.sholten@jpmorgan.com	GMAC Mortgage, LLC	Custodial
2869	796679959	JPMORGAN CHASE BANK, N.A.	3rd First National Plaza Chicago, IL 60602	William Sholten 312-732-4600 william.sholten@jpmorgan.com	GMAC Mortgage, LLC	Custodial
2870	796679967	JPMORGAN CHASE BANK, N.A.	3rd First National Plaza Chicago, IL 60602	William Sholten 312-732-4600 william.sholten@jpmorgan.com	GMAC Mortgage, LLC	Custodial
2871	796679975	JPMORGAN CHASE BANK, N.A.	3rd First National Plaza Chicago, IL 60602	William Sholten 312-732-4600 william.sholten@jpmorgan.com	GMAC Mortgage, LLC	Custodial
2872	796679983	JPMORGAN CHASE BANK, N.A.	3rd First National Plaza Chicago, IL 60602	William Sholten 312-732-4600 william.sholten@jpmorgan.com	GMAC Mortgage, LLC	Custodial
2873	796679991	JPMORGAN CHASE BANK, N.A.	3rd First National Plaza Chicago, IL 60602	William Sholten 312-732-4600 william.sholten@jpmorgan.com	GMAC Mortgage, LLC	Custodial
2874	796680007	JPMORGAN CHASE BANK, N.A.	3rd First National Plaza Chicago, IL 60602	William Sholten 312-732-4600 william.sholten@jpmorgan.com	GMAC Mortgage, LLC	Custodial
2875	796680015	JPMORGAN CHASE BANK, N.A.	3rd First National Plaza Chicago, IL 60602	William Sholten 312-732-4600 william.sholten@jpmorgan.com	GMAC Mortgage, LLC	Custodial
2876	796680023	JPMORGAN CHASE BANK, N.A.	3rd First National Plaza Chicago, IL 60602	William Sholten 312-732-4600 william.sholten@jpmorgan.com	GMAC Mortgage, LLC	Custodial
2877	796680031	JPMORGAN CHASE BANK, N.A.	3rd First National Plaza Chicago, IL 60602	William Sholten 312-732-4600 william.sholten@jpmorgan.com	GMAC Mortgage, LLC	Custodial
2878	796680049	JPMORGAN CHASE BANK, N.A.	3rd First National Plaza Chicago, IL 60602	William Sholten 312-732-4600 william.sholten@jpmorgan.com	GMAC Mortgage, LLC	Custodial
2879	796680056	JPMORGAN CHASE BANK, N.A.	3rd First National Plaza Chicago, IL 60602	William Sholten 312-732-4600 william.sholten@jpmorgan.com	GMAC Mortgage, LLC	Custodial
2880	796680064	JPMORGAN CHASE BANK, N.A.	3rd First National Plaza Chicago, IL 60602	William Sholten 312-732-4600 william.sholten@jpmorgan.com	GMAC Mortgage, LLC	Custodial
2881	796680072	JPMORGAN CHASE BANK, N.A.	3rd First National Plaza Chicago, IL 60602	William Sholten 312-732-4600 william.sholten@jpmorgan.com	GMAC Mortgage, LLC	Custodial

Privileged and Confidential

Exhibit B - Bank Accounts

Ref #	Account Number	Bank	Address	Contact	Corporate/Company Code	Account Type
2882	796680080	JPMORGAN CHASE BANK, N.A.	3rd First National Plaza Chicago, IL 60602	William Sholten 312-732-4600 william.sholten@jpmorgan.com	GMAC Mortgage, LLC	Custodial
2883	796680098	JPMORGAN CHASE BANK, N.A.	3rd First National Plaza Chicago, IL 60602	William Sholten 312-732-4600 william.sholten@jpmorgan.com	GMAC Mortgage, LLC	Custodial
2884	796680106	JPMORGAN CHASE BANK, N.A.	3rd First National Plaza Chicago, IL 60602	William Sholten 312-732-4600 william.sholten@jpmorgan.com	GMAC Mortgage, LLC	Custodial
2885	796680114	JPMORGAN CHASE BANK, N.A.	3rd First National Plaza Chicago, IL 60602	William Sholten 312-732-4600 william.sholten@jpmorgan.com	GMAC Mortgage, LLC	Custodial
2886	796680122	JPMORGAN CHASE BANK, N.A.	3rd First National Plaza Chicago, IL 60602	William Sholten 312-732-4600 william.sholten@jpmorgan.com	GMAC Mortgage, LLC	Custodial
2887	796680130	JPMORGAN CHASE BANK, N.A.	3rd First National Plaza Chicago, IL 60602	William Sholten 312-732-4600 william.sholten@jpmorgan.com	GMAC Mortgage, LLC	Custodial
2888	796680189	JPMORGAN CHASE BANK, N.A.	3rd First National Plaza Chicago, IL 60602	William Sholten 312-732-4600 william.sholten@jpmorgan.com	GMAC Mortgage, LLC	Custodial
2889	796680197	JPMORGAN CHASE BANK, N.A.	3rd First National Plaza Chicago, IL 60602	William Sholten 312-732-4600 william.sholten@jpmorgan.com	GMAC Mortgage, LLC	Custodial
2890	796680205	JPMORGAN CHASE BANK, N.A.	3rd First National Plaza Chicago, IL 60602	William Sholten 312-732-4600 william.sholten@jpmorgan.com	GMAC Mortgage, LLC	Custodial
2891	796680213	JPMORGAN CHASE BANK, N.A.	3rd First National Plaza Chicago, IL 60602	William Sholten 312-732-4600 william.sholten@jpmorgan.com	GMAC Mortgage, LLC	Custodial
2892	796680221	JPMORGAN CHASE BANK, N.A.	3rd First National Plaza Chicago, IL 60602	William Sholten 312-732-4600 william.sholten@jpmorgan.com	GMAC Mortgage, LLC	Custodial
2893	796680254	JPMORGAN CHASE BANK, N.A.	3rd First National Plaza Chicago, IL 60602	William Sholten 312-732-4600 william.sholten@jpmorgan.com	GMAC Mortgage, LLC	Custodial
2894	796680262	JPMORGAN CHASE BANK, N.A.	3rd First National Plaza Chicago, IL 60602	William Sholten 312-732-4600 william.sholten@jpmorgan.com	GMAC Mortgage, LLC	Custodial
2895	796680270	JPMORGAN CHASE BANK, N.A.	3rd First National Plaza Chicago, IL 60602	William Sholten 312-732-4600 william.sholten@jpmorgan.com	GMAC Mortgage, LLC	Custodial
2896	796680288	JPMORGAN CHASE BANK, N.A.	3rd First National Plaza Chicago, IL 60602	William Sholten 312-732-4600 william.sholten@jpmorgan.com	GMAC Mortgage, LLC	Custodial
2897	796680296	JPMORGAN CHASE BANK, N.A.	3rd First National Plaza Chicago, IL 60602	William Sholten 312-732-4600 william.sholten@jpmorgan.com	GMAC Mortgage, LLC	Custodial
2898	796680304	JPMORGAN CHASE BANK, N.A.	3rd First National Plaza Chicago, IL 60602	William Sholten 312-732-4600 william.sholten@jpmorgan.com	GMAC Mortgage, LLC	Custodial
2899	796680312	JPMORGAN CHASE BANK, N.A.	3rd First National Plaza Chicago, IL 60602	William Sholten 312-732-4600 william.sholten@jpmorgan.com	GMAC Mortgage, LLC	Custodial
2900	796680338	JPMORGAN CHASE BANK, N.A.	3rd First National Plaza Chicago, IL 60602	William Sholten 312-732-4600 william.sholten@jpmorgan.com	GMAC Mortgage, LLC	Custodial
2901	796680361	JPMORGAN CHASE BANK, N.A.	3rd First National Plaza Chicago, IL 60602	William Sholten 312-732-4600 william.sholten@jpmorgan.com	GMAC Mortgage, LLC	Custodial
2902	796680379	JPMORGAN CHASE BANK, N.A.	3rd First National Plaza Chicago, IL 60602	William Sholten 312-732-4600 william.sholten@jpmorgan.com	GMAC Mortgage, LLC	Custodial
2903	796680387	JPMORGAN CHASE BANK, N.A.	3rd First National Plaza Chicago, IL 60602	William Sholten 312-732-4600 william.sholten@jpmorgan.com	GMAC Mortgage, LLC	Custodial
2904	796680395	JPMORGAN CHASE BANK, N.A.	3rd First National Plaza Chicago, IL 60602	William Sholten 312-732-4600 william.sholten@jpmorgan.com	GMAC Mortgage, LLC	Custodial
2905	796680403	JPMORGAN CHASE BANK, N.A.	3rd First National Plaza Chicago, IL 60602	William Sholten 312-732-4600 william.sholten@jpmorgan.com	GMAC Mortgage, LLC	Custodial
2906	796680411	JPMORGAN CHASE BANK, N.A.	3rd First National Plaza Chicago, IL 60602	William Sholten 312-732-4600 william.sholten@jpmorgan.com	GMAC Mortgage, LLC	Custodial
2907	796680429	JPMORGAN CHASE BANK, N.A.	3rd First National Plaza Chicago, IL 60602	William Sholten 312-732-4600 william.sholten@jpmorgan.com	GMAC Mortgage, LLC	Custodial
2908	796680437	JPMORGAN CHASE BANK, N.A.	3rd First National Plaza Chicago, IL 60602	William Sholten 312-732-4600 william.sholten@jpmorgan.com	GMAC Mortgage, LLC	Custodial
2909	796680445	JPMORGAN CHASE BANK, N.A.	3rd First National Plaza Chicago, IL 60602	William Sholten 312-732-4600 william.sholten@jpmorgan.com	GMAC Mortgage, LLC	Custodial
2910	796680452	JPMORGAN CHASE BANK, N.A.	3rd First National Plaza Chicago, IL 60602	William Sholten 312-732-4600 william.sholten@jpmorgan.com	GMAC Mortgage, LLC	Custodial
2911	796680460	JPMORGAN CHASE BANK, N.A.	3rd First National Plaza Chicago, IL 60602	William Sholten 312-732-4600 william.sholten@jpmorgan.com	GMAC Mortgage, LLC	Custodial
2912	796680478	JPMORGAN CHASE BANK, N.A.	3rd First National Plaza Chicago, IL 60602	William Sholten 312-732-4600 william.sholten@jpmorgan.com	GMAC Mortgage, LLC	Custodial
2913	796680486	JPMORGAN CHASE BANK, N.A.	3rd First National Plaza Chicago, IL 60602	William Sholten 312-732-4600 william.sholten@jpmorgan.com	GMAC Mortgage, LLC	Custodial
2914	796680494	JPMORGAN CHASE BANK, N.A.	3rd First National Plaza Chicago, IL 60602	William Sholten 312-732-4600 william.sholten@jpmorgan.com	GMAC Mortgage, LLC	Custodial
2915	796680502	JPMORGAN CHASE BANK, N.A.	3rd First National Plaza Chicago, IL 60602	William Sholten 312-732-4600 william.sholten@jpmorgan.com	GMAC Mortgage, LLC	Custodial
2916	796680510	JPMORGAN CHASE BANK, N.A.	3rd First National Plaza Chicago, IL 60602	William Sholten 312-732-4600 william.sholten@jpmorgan.com	GMAC Mortgage, LLC	Custodial
2917	796680528	JPMORGAN CHASE BANK, N.A.	3rd First National Plaza Chicago, IL 60602	William Sholten 312-732-4600 william.sholten@jpmorgan.com	GMAC Mortgage, LLC	Custodial
2918	796680536	JPMORGAN CHASE BANK, N.A.	3rd First National Plaza Chicago, IL 60602	William Sholten 312-732-4600 william.sholten@jpmorgan.com	GMAC Mortgage, LLC	Custodial
2919	796680544	JPMORGAN CHASE BANK, N.A.	3rd First National Plaza Chicago, IL 60602	William Sholten 312-732-4600 william.sholten@jpmorgan.com	GMAC Mortgage, LLC	Custodial
2920	796680551	JPMORGAN CHASE BANK, N.A.	3rd First National Plaza Chicago, IL 60602	William Sholten 312-732-4600 william.sholten@jpmorgan.com	GMAC Mortgage, LLC	Custodial
2921	796680569	JPMORGAN CHASE BANK, N.A.	3rd First National Plaza Chicago, IL 60602	William Sholten 312-732-4600 william.sholten@jpmorgan.com	GMAC Mortgage, LLC	Custodial
2922	796680577	JPMORGAN CHASE BANK, N.A.	3rd First National Plaza Chicago, IL 60602	William Sholten 312-732-4600 william.sholten@jpmorgan.com	GMAC Mortgage, LLC	Custodial
2923	796680585	JPMORGAN CHASE BANK, N.A.	3rd First National Plaza Chicago, IL 60602	William Sholten 312-732-4600 william.sholten@jpmorgan.com	GMAC Mortgage, LLC	Custodial
2924	796680593	JPMORGAN CHASE BANK, N.A.	3rd First National Plaza Chicago, IL 60602	William Sholten 312-732-4600 william.sholten@jpmorgan.com	GMAC Mortgage, LLC	Custodial

Privileged and Confidential

Exhibit B - Bank Accounts

Ref #	Account Number	Bank	Address	Contact	Corporate/Company Code	Account Type
2925	796680601	JPMORGAN CHASE BANK, N.A.	3rd First National Plaza Chicago, IL 60602	William Sholten 312-732-4600 william.sholten@jpmorgan.com	GMAC Mortgage, LLC	Operating - General
2926	796680627	JPMORGAN CHASE BANK, N.A.	3rd First National Plaza Chicago, IL 60602	William Sholten 312-732-4600 william.sholten@jpmorgan.com	GMAC Mortgage, LLC	Custodial
2927	796680635	JPMORGAN CHASE BANK, N.A.	3rd First National Plaza Chicago, IL 60602	William Sholten 312-732-4600 william.sholten@jpmorgan.com	GMAC Mortgage, LLC	Custodial
2928	796680643	JPMORGAN CHASE BANK, N.A.	3rd First National Plaza Chicago, IL 60602	William Sholten 312-732-4600 william.sholten@jpmorgan.com	GMAC Mortgage, LLC	Custodial
2929	796680650	JPMORGAN CHASE BANK, N.A.	3rd First National Plaza Chicago, IL 60602	William Sholten 312-732-4600 william.sholten@jpmorgan.com	GMAC Mortgage, LLC	Custodial
2930	796680668	JPMORGAN CHASE BANK, N.A.	3rd First National Plaza Chicago, IL 60602	William Sholten 312-732-4600 william.sholten@jpmorgan.com	GMAC Mortgage, LLC	Custodial
2931	796680676	JPMORGAN CHASE BANK, N.A.	3rd First National Plaza Chicago, IL 60602	William Sholten 312-732-4600 william.sholten@jpmorgan.com	GMAC Mortgage, LLC	Custodial
2932	796680684	JPMORGAN CHASE BANK, N.A.	3rd First National Plaza Chicago, IL 60602	William Sholten 312-732-4600 william.sholten@jpmorgan.com	GMAC Mortgage, LLC	Custodial
2933	796680692	JPMORGAN CHASE BANK, N.A.	3rd First National Plaza Chicago, IL 60602	William Sholten 312-732-4600 william.sholten@jpmorgan.com	GMAC Mortgage, LLC	Operating - General
2934	796680700	JPMORGAN CHASE BANK, N.A.	3rd First National Plaza Chicago, IL 60602	William Sholten 312-732-4600 william.sholten@jpmorgan.com	GMAC Mortgage, LLC	Custodial
2935	796680718	JPMORGAN CHASE BANK, N.A.	3rd First National Plaza Chicago, IL 60602	William Sholten 312-732-4600 william.sholten@jpmorgan.com	GMAC Mortgage, LLC	Custodial
2936	796680726	JPMORGAN CHASE BANK, N.A.	3rd First National Plaza Chicago, IL 60602	William Sholten 312-732-4600 william.sholten@jpmorgan.com	GMAC Mortgage, LLC	Custodial
2937	796680734	JPMORGAN CHASE BANK, N.A.	3rd First National Plaza Chicago, IL 60602	William Sholten 312-732-4600 william.sholten@jpmorgan.com	GMAC Mortgage, LLC	Custodial
2938	796680742	JPMORGAN CHASE BANK, N.A.	3rd First National Plaza Chicago, IL 60602	William Sholten 312-732-4600 william.sholten@jpmorgan.com	GMAC Mortgage, LLC	Custodial
2939	796680759	JPMORGAN CHASE BANK, N.A.	3rd First National Plaza Chicago, IL 60602	William Sholten 312-732-4600 william.sholten@jpmorgan.com	GMAC Mortgage, LLC	Custodial
2940	796680767	JPMORGAN CHASE BANK, N.A.	3rd First National Plaza Chicago, IL 60602	William Sholten 312-732-4600 william.sholten@jpmorgan.com	GMAC Mortgage, LLC	Custodial
2941	796680775	JPMORGAN CHASE BANK, N.A.	3rd First National Plaza Chicago, IL 60602	William Sholten 312-732-4600 william.sholten@jpmorgan.com	GMAC Mortgage, LLC	Custodial
2942	796680783	JPMORGAN CHASE BANK, N.A.	3rd First National Plaza Chicago, IL 60602	William Sholten 312-732-4600 william.sholten@jpmorgan.com	GMAC Mortgage, LLC	Custodial
2943	796680791	JPMORGAN CHASE BANK, N.A.	3rd First National Plaza Chicago, IL 60602	William Sholten 312-732-4600 william.sholten@jpmorgan.com	GMAC Mortgage, LLC	Custodial
2944	796680809	JPMORGAN CHASE BANK, N.A.	3rd First National Plaza Chicago, IL 60602	William Sholten 312-732-4600 william.sholten@jpmorgan.com	GMAC Mortgage, LLC	Custodial
2945	796680817	JPMORGAN CHASE BANK, N.A.	3rd First National Plaza Chicago, IL 60602	William Sholten 312-732-4600 william.sholten@jpmorgan.com	GMAC Mortgage, LLC	Custodial
2946	796680825	JPMORGAN CHASE BANK, N.A.	3rd First National Plaza Chicago, IL 60602	William Sholten 312-732-4600 william.sholten@jpmorgan.com	GMAC Mortgage, LLC	Custodial
2947	796680833	JPMORGAN CHASE BANK, N.A.	3rd First National Plaza Chicago, IL 60602	William Sholten 312-732-4600 william.sholten@jpmorgan.com	GMAC Mortgage, LLC	Custodial
2948	796680841	JPMORGAN CHASE BANK, N.A.	3rd First National Plaza Chicago, IL 60602	William Sholten 312-732-4600 william.sholten@jpmorgan.com	GMAC Mortgage, LLC	Custodial
2949	796680858	JPMORGAN CHASE BANK, N.A.	3rd First National Plaza Chicago, IL 60602	William Sholten 312-732-4600 william.sholten@jpmorgan.com	GMAC Mortgage, LLC	Custodial
2950	796680866	JPMORGAN CHASE BANK, N.A.	3rd First National Plaza Chicago, IL 60602	William Sholten 312-732-4600 william.sholten@jpmorgan.com	GMAC Mortgage, LLC	Custodial
2951	796680874	JPMORGAN CHASE BANK, N.A.	3rd First National Plaza Chicago, IL 60602	William Sholten 312-732-4600 william.sholten@jpmorgan.com	GMAC Mortgage, LLC	Custodial
2952	796680882	JPMORGAN CHASE BANK, N.A.	3rd First National Plaza Chicago, IL 60602	William Sholten 312-732-4600 william.sholten@jpmorgan.com	GMAC Mortgage, LLC	Custodial
2953	796680890	JPMORGAN CHASE BANK, N.A.	3rd First National Plaza Chicago, IL 60602	William Sholten 312-732-4600 william.sholten@jpmorgan.com	GMAC Mortgage, LLC	Custodial
2954	796680908	JPMORGAN CHASE BANK, N.A.	3rd First National Plaza Chicago, IL 60602	William Sholten 312-732-4600 william.sholten@jpmorgan.com	GMAC Mortgage, LLC	Custodial
2955	796680916	JPMORGAN CHASE BANK, N.A.	3rd First National Plaza Chicago, IL 60602	William Sholten 312-732-4600 william.sholten@jpmorgan.com	GMAC Mortgage, LLC	Custodial
2956	796680924	JPMORGAN CHASE BANK, N.A.	3rd First National Plaza Chicago, IL 60602	William Sholten 312-732-4600 william.sholten@jpmorgan.com	GMAC Mortgage, LLC	Custodial
2957	796680932	JPMORGAN CHASE BANK, N.A.	3rd First National Plaza Chicago, IL 60602	William Sholten 312-732-4600 william.sholten@jpmorgan.com	GMAC Mortgage, LLC	Custodial
2958	796680940	JPMORGAN CHASE BANK, N.A.	3rd First National Plaza Chicago, IL 60602	William Sholten 312-732-4600 william.sholten@jpmorgan.com	GMAC Mortgage, LLC	Custodial
2959	796680957	JPMORGAN CHASE BANK, N.A.	3rd First National Plaza Chicago, IL 60602	William Sholten 312-732-4600 william.sholten@jpmorgan.com	GMAC Mortgage, LLC	Custodial
2960	796680965	JPMORGAN CHASE BANK, N.A.	3rd First National Plaza Chicago, IL 60602	William Sholten 312-732-4600 william.sholten@jpmorgan.com	GMAC Mortgage, LLC	Custodial
2961	796680973	JPMORGAN CHASE BANK, N.A.	3rd First National Plaza Chicago, IL 60602	William Sholten 312-732-4600 william.sholten@jpmorgan.com	GMAC Mortgage, LLC	Custodial
2962	796680981	JPMORGAN CHASE BANK, N.A.	3rd First National Plaza Chicago, IL 60602	William Sholten 312-732-4600 william.sholten@jpmorgan.com	GMAC Mortgage, LLC	Custodial
2963	796680999	JPMORGAN CHASE BANK, N.A.	3rd First National Plaza Chicago, IL 60602	William Sholten 312-732-4600 william.sholten@jpmorgan.com	GMAC Mortgage, LLC	Custodial
2964	796681005	JPMORGAN CHASE BANK, N.A.	3rd First National Plaza Chicago, IL 60602	William Sholten 312-732-4600 william.sholten@jpmorgan.com	GMAC Mortgage, LLC	Custodial
2965	796681013	JPMORGAN CHASE BANK, N.A.	3rd First National Plaza Chicago, IL 60602	William Sholten 312-732-4600 william.sholten@jpmorgan.com	GMAC Mortgage, LLC	Custodial
2966	796681021	JPMORGAN CHASE BANK, N.A.	3rd First National Plaza Chicago, IL 60602	William Sholten 312-732-4600 william.sholten@jpmorgan.com	GMAC Mortgage, LLC	Custodial
2967	796681039	JPMORGAN CHASE BANK, N.A.	3rd First National Plaza Chicago, IL 60602	William Sholten 312-732-4600 william.sholten@jpmorgan.com	GMAC Mortgage, LLC	Custodial

Privileged and Confidential

Exhibit B - Bank Accounts

Ref #	Account Number	Bank	Address	Contact	Corporate/Company Code	Account Type
2968	796681047	JPMORGAN CHASE BANK, N.A.	3rd First National Plaza Chicago, IL 60602	William Sholten 312-732-4600 william.sholten@jpmorgan.com	GMAC Mortgage, LLC	Custodial
2969	796681054	JPMORGAN CHASE BANK, N.A.	3rd First National Plaza Chicago, IL 60602	William Sholten 312-732-4600 william.sholten@jpmorgan.com	GMAC Mortgage, LLC	Custodial
2970	796681062	JPMORGAN CHASE BANK, N.A.	3rd First National Plaza Chicago, IL 60602	William Sholten 312-732-4600 william.sholten@jpmorgan.com	GMAC Mortgage, LLC	Custodial
2971	796681070	JPMORGAN CHASE BANK, N.A.	3rd First National Plaza Chicago, IL 60602	William Sholten 312-732-4600 william.sholten@jpmorgan.com	GMAC Mortgage, LLC	Custodial
2972	796681088	JPMORGAN CHASE BANK, N.A.	3rd First National Plaza Chicago, IL 60602	William Sholten 312-732-4600 william.sholten@jpmorgan.com	GMAC Mortgage, LLC	Custodial
2973	796681096	JPMORGAN CHASE BANK, N.A.	3rd First National Plaza Chicago, IL 60602	William Sholten 312-732-4600 william.sholten@jpmorgan.com	GMAC Mortgage, LLC	Custodial
2974	796681104	JPMORGAN CHASE BANK, N.A.	3rd First National Plaza Chicago, IL 60602	William Sholten 312-732-4600 william.sholten@jpmorgan.com	GMAC Mortgage, LLC	Custodial
2975	796681112	JPMORGAN CHASE BANK, N.A.	3rd First National Plaza Chicago, IL 60602	William Sholten 312-732-4600 william.sholten@jpmorgan.com	GMAC Mortgage, LLC	Custodial
2976	796681120	JPMORGAN CHASE BANK, N.A.	3rd First National Plaza Chicago, IL 60602	William Sholten 312-732-4600 william.sholten@jpmorgan.com	GMAC Mortgage, LLC	Custodial
2977	796681138	JPMORGAN CHASE BANK, N.A.	3rd First National Plaza Chicago, IL 60602	William Sholten 312-732-4600 william.sholten@jpmorgan.com	GMAC Mortgage, LLC	Custodial
2978	796681146	JPMORGAN CHASE BANK, N.A.	3rd First National Plaza Chicago, IL 60602	William Sholten 312-732-4600 william.sholten@jpmorgan.com	GMAC Mortgage, LLC	Custodial
2979	796681153	JPMORGAN CHASE BANK, N.A.	3rd First National Plaza Chicago, IL 60602	William Sholten 312-732-4600 william.sholten@jpmorgan.com	GMAC Mortgage, LLC	Custodial
2980	796681161	JPMORGAN CHASE BANK, N.A.	3rd First National Plaza Chicago, IL 60602	William Sholten 312-732-4600 william.sholten@jpmorgan.com	GMAC Mortgage, LLC	Custodial
2981	796681179	JPMORGAN CHASE BANK, N.A.	3rd First National Plaza Chicago, IL 60602	William Sholten 312-732-4600 william.sholten@jpmorgan.com	GMAC Mortgage, LLC	Custodial
2982	796681187	JPMORGAN CHASE BANK, N.A.	3rd First National Plaza Chicago, IL 60602	William Sholten 312-732-4600 william.sholten@jpmorgan.com	GMAC Mortgage, LLC	Custodial
2983	796681195	JPMORGAN CHASE BANK, N.A.	3rd First National Plaza Chicago, IL 60602	William Sholten 312-732-4600 william.sholten@jpmorgan.com	GMAC Mortgage, LLC	Custodial
2984	796681203	JPMORGAN CHASE BANK, N.A.	3rd First National Plaza Chicago, IL 60602	William Sholten 312-732-4600 william.sholten@jpmorgan.com	GMAC Mortgage, LLC	Custodial
2985	796681229	JPMORGAN CHASE BANK, N.A.	3rd First National Plaza Chicago, IL 60602	William Sholten 312-732-4600 william.sholten@jpmorgan.com	GMAC Mortgage, LLC	Custodial
2986	796681237	JPMORGAN CHASE BANK, N.A.	3rd First National Plaza Chicago, IL 60602	William Sholten 312-732-4600 william.sholten@jpmorgan.com	GMAC Mortgage, LLC	Custodial
2987	796681245	JPMORGAN CHASE BANK, N.A.	3rd First National Plaza Chicago, IL 60602	William Sholten 312-732-4600 william.sholten@jpmorgan.com	GMAC Mortgage, LLC	Custodial
2988	796681252	JPMORGAN CHASE BANK, N.A.	3rd First National Plaza Chicago, IL 60602	William Sholten 312-732-4600 william.sholten@jpmorgan.com	GMAC Mortgage, LLC	Custodial
2989	796681260	JPMORGAN CHASE BANK, N.A.	3rd First National Plaza Chicago, IL 60602	William Sholten 312-732-4600 william.sholten@jpmorgan.com	GMAC Mortgage, LLC	Custodial
2990	796681278	JPMORGAN CHASE BANK, N.A.	3rd First National Plaza Chicago, IL 60602	William Sholten 312-732-4600 william.sholten@jpmorgan.com	GMAC Mortgage, LLC	Custodial
2991	796681286	JPMORGAN CHASE BANK, N.A.	3rd First National Plaza Chicago, IL 60602	William Sholten 312-732-4600 william.sholten@jpmorgan.com	GMAC Mortgage, LLC	Custodial
2992	796681302	JPMORGAN CHASE BANK, N.A.	3rd First National Plaza Chicago, IL 60602	William Sholten 312-732-4600 william.sholten@jpmorgan.com	GMAC Mortgage, LLC	Custodial
2993	796681310	JPMORGAN CHASE BANK, N.A.	3rd First National Plaza Chicago, IL 60602	William Sholten 312-732-4600 william.sholten@jpmorgan.com	GMAC Mortgage, LLC	Custodial
2994	796681328	JPMORGAN CHASE BANK, N.A.	3rd First National Plaza Chicago, IL 60602	William Sholten 312-732-4600 william.sholten@jpmorgan.com	GMAC Mortgage, LLC	Custodial
2995	796681336	JPMORGAN CHASE BANK, N.A.	3rd First National Plaza Chicago, IL 60602	William Sholten 312-732-4600 william.sholten@jpmorgan.com	GMAC Mortgage, LLC	Custodial
2996	796681344	JPMORGAN CHASE BANK, N.A.	3rd First National Plaza Chicago, IL 60602	William Sholten 312-732-4600 william.sholten@jpmorgan.com	GMAC Mortgage, LLC	Custodial
2997	796681351	JPMORGAN CHASE BANK, N.A.	3rd First National Plaza Chicago, IL 60602	William Sholten 312-732-4600 william.sholten@jpmorgan.com	GMAC Mortgage, LLC	Custodial
2998	796681369	JPMORGAN CHASE BANK, N.A.	3rd First National Plaza Chicago, IL 60602	William Sholten 312-732-4600 william.sholten@jpmorgan.com	GMAC Mortgage, LLC	Custodial
2999	796681377	JPMORGAN CHASE BANK, N.A.	3rd First National Plaza Chicago, IL 60602	William Sholten 312-732-4600 william.sholten@jpmorgan.com	GMAC Mortgage, LLC	Custodial
3000	796681385	JPMORGAN CHASE BANK, N.A.	3rd First National Plaza Chicago, IL 60602	William Sholten 312-732-4600 william.sholten@jpmorgan.com	GMAC Mortgage, LLC	Custodial
3001	796681393	JPMORGAN CHASE BANK, N.A.	3rd First National Plaza Chicago, IL 60602	William Sholten 312-732-4600 william.sholten@jpmorgan.com	GMAC Mortgage, LLC	Custodial
3002	796681401	JPMORGAN CHASE BANK, N.A.	3rd First National Plaza Chicago, IL 60602	William Sholten 312-732-4600 william.sholten@jpmorgan.com	GMAC Mortgage, LLC	Custodial
3003	796681419	JPMORGAN CHASE BANK, N.A.	3rd First National Plaza Chicago, IL 60602	William Sholten 312-732-4600 william.sholten@jpmorgan.com	GMAC Mortgage, LLC	Custodial
3004	796681427	JPMORGAN CHASE BANK, N.A.	3rd First National Plaza Chicago, IL 60602	William Sholten 312-732-4600 william.sholten@jpmorgan.com	GMAC Mortgage, LLC	Custodial
3005	796681435	JPMORGAN CHASE BANK, N.A.	3rd First National Plaza Chicago, IL 60602	William Sholten 312-732-4600 william.sholten@jpmorgan.com	GMAC Mortgage, LLC	Custodial
3006	796681443	JPMORGAN CHASE BANK, N.A.	3rd First National Plaza Chicago, IL 60602	William Sholten 312-732-4600 william.sholten@jpmorgan.com	GMAC Mortgage, LLC	Custodial
3007	796681450	JPMORGAN CHASE BANK, N.A.	3rd First National Plaza Chicago, IL 60602	William Sholten 312-732-4600 william.sholten@jpmorgan.com	GMAC Mortgage, LLC	Custodial
3008	796681468	JPMORGAN CHASE BANK, N.A.	3rd First National Plaza Chicago, IL 60602	William Sholten 312-732-4600 william.sholten@jpmorgan.com	GMAC Mortgage, LLC	Custodial
3009	796681476	JPMORGAN CHASE BANK, N.A.	3rd First National Plaza Chicago, IL 60602	William Sholten 312-732-4600 william.sholten@jpmorgan.com	GMAC Mortgage, LLC	Custodial
3010	796681484	JPMORGAN CHASE BANK, N.A.	3rd First National Plaza Chicago, IL 60602	William Sholten 312-732-4600 william.sholten@jpmorgan.com	GMAC Mortgage, LLC	Custodial

Privileged and Confidential

Exhibit B - Bank Accounts

Ref #	Account Number	Bank	Address	Contact	Corporate/Company Code	Account Type
3011	796681492	JPMORGAN CHASE BANK, N.A.	3rd First National Plaza Chicago, IL 60602	William Sholten 312-732-4600 william.sholten@jpmorgan.com	GMAC Mortgage, LLC	Custodial
3012	796681500	JPMORGAN CHASE BANK, N.A.	3rd First National Plaza Chicago, IL 60602	William Sholten 312-732-4600 william.sholten@jpmorgan.com	GMAC Mortgage, LLC	Custodial
3013	796681518	JPMORGAN CHASE BANK, N.A.	3rd First National Plaza Chicago, IL 60602	William Sholten 312-732-4600 william.sholten@jpmorgan.com	GMAC Mortgage, LLC	Custodial
3014	796681526	JPMORGAN CHASE BANK, N.A.	3rd First National Plaza Chicago, IL 60602	William Sholten 312-732-4600 william.sholten@jpmorgan.com	GMAC Mortgage, LLC	Custodial
3015	796681534	JPMORGAN CHASE BANK, N.A.	3rd First National Plaza Chicago, IL 60602	William Sholten 312-732-4600 william.sholten@jpmorgan.com	GMAC Mortgage, LLC	Custodial
3016	796681542	JPMORGAN CHASE BANK, N.A.	3rd First National Plaza Chicago, IL 60602	William Sholten 312-732-4600 william.sholten@jpmorgan.com	GMAC Mortgage, LLC	Custodial
3017	796681559	JPMORGAN CHASE BANK, N.A.	3rd First National Plaza Chicago, IL 60602	William Sholten 312-732-4600 william.sholten@jpmorgan.com	GMAC Mortgage, LLC	Custodial
3018	796681567	JPMORGAN CHASE BANK, N.A.	3rd First National Plaza Chicago, IL 60602	William Sholten 312-732-4600 william.sholten@jpmorgan.com	GMAC Mortgage, LLC	Custodial
3019	796681575	JPMORGAN CHASE BANK, N.A.	3rd First National Plaza Chicago, IL 60602	William Sholten 312-732-4600 william.sholten@jpmorgan.com	GMAC Mortgage, LLC	Custodial
3020	796681583	JPMORGAN CHASE BANK, N.A.	3rd First National Plaza Chicago, IL 60602	William Sholten 312-732-4600 william.sholten@jpmorgan.com	GMAC Mortgage, LLC	Custodial
3021	796681591	JPMORGAN CHASE BANK, N.A.	3rd First National Plaza Chicago, IL 60602	William Sholten 312-732-4600 william.sholten@jpmorgan.com	GMAC Mortgage, LLC	Custodial
3022	796681609	JPMORGAN CHASE BANK, N.A.	3rd First National Plaza Chicago, IL 60602	William Sholten 312-732-4600 william.sholten@jpmorgan.com	GMAC Mortgage, LLC	Custodial
3023	796681617	JPMORGAN CHASE BANK, N.A.	3rd First National Plaza Chicago, IL 60602	William Sholten 312-732-4600 william.sholten@jpmorgan.com	GMAC Mortgage, LLC	Custodial
3024	796681625	JPMORGAN CHASE BANK, N.A.	3rd First National Plaza Chicago, IL 60602	William Sholten 312-732-4600 william.sholten@jpmorgan.com	GMAC Mortgage, LLC	Custodial
3025	796681658	JPMORGAN CHASE BANK, N.A.	3rd First National Plaza Chicago, IL 60602	William Sholten 312-732-4600 william.sholten@jpmorgan.com	GMAC Mortgage, LLC	Custodial
3026	796681674	JPMORGAN CHASE BANK, N.A.	3rd First National Plaza Chicago, IL 60602	William Sholten 312-732-4600 william.sholten@jpmorgan.com	GMAC Mortgage, LLC	Custodial
3027	796681708	JPMORGAN CHASE BANK, N.A.	3rd First National Plaza Chicago, IL 60602	William Sholten 312-732-4600 william.sholten@jpmorgan.com	GMAC Mortgage, LLC	Custodial
3028	796681716	JPMORGAN CHASE BANK, N.A.	3rd First National Plaza Chicago, IL 60602	William Sholten 312-732-4600 william.sholten@jpmorgan.com	GMAC Mortgage, LLC	Custodial
3029	796681724	JPMORGAN CHASE BANK, N.A.	3rd First National Plaza Chicago, IL 60602	William Sholten 312-732-4600 william.sholten@jpmorgan.com	GMAC Mortgage, LLC	Custodial
3030	796681732	JPMORGAN CHASE BANK, N.A.	3rd First National Plaza Chicago, IL 60602	William Sholten 312-732-4600 william.sholten@jpmorgan.com	GMAC Mortgage, LLC	Custodial
3031	796681740	JPMORGAN CHASE BANK, N.A.	3rd First National Plaza Chicago, IL 60602	William Sholten 312-732-4600 william.sholten@jpmorgan.com	GMAC Mortgage, LLC	Custodial
3032	796681757	JPMORGAN CHASE BANK, N.A.	3rd First National Plaza Chicago, IL 60602	William Sholten 312-732-4600 william.sholten@jpmorgan.com	GMAC Mortgage, LLC	Custodial
3033	796681765	JPMORGAN CHASE BANK, N.A.	3rd First National Plaza Chicago, IL 60602	William Sholten 312-732-4600 william.sholten@jpmorgan.com	GMAC Mortgage, LLC	Custodial
3034	796681773	JPMORGAN CHASE BANK, N.A.	3rd First National Plaza Chicago, IL 60602	William Sholten 312-732-4600 william.sholten@jpmorgan.com	GMAC Mortgage, LLC	Custodial
3035	796681781	JPMORGAN CHASE BANK, N.A.	3rd First National Plaza Chicago, IL 60602	William Sholten 312-732-4600 william.sholten@jpmorgan.com	ETS of Washington, Inc.	Operating - Other
3036	796681799	JPMORGAN CHASE BANK, N.A.	3rd First National Plaza Chicago, IL 60602	William Sholten 312-732-4600 william.sholten@jpmorgan.com	ETS of Washington, Inc.	Operating - Other
3037	796681807	JPMORGAN CHASE BANK, N.A.	3rd First National Plaza Chicago, IL 60602	William Sholten 312-732-4600 william.sholten@jpmorgan.com	GMAC Mortgage, LLC	Non-Operating - Receipt
3038	796681815	JPMORGAN CHASE BANK, N.A.	3rd First National Plaza Chicago, IL 60602	William Sholten 312-732-4600 william.sholten@jpmorgan.com	Residential Funding Company, LLC	Non-Operating - Receipt
3039	796681823	JPMORGAN CHASE BANK, N.A.	3rd First National Plaza Chicago, IL 60602	William Sholten 312-732-4600 william.sholten@jpmorgan.com	GMAC Mortgage, LLC	Custodial
3040	796681831	JPMORGAN CHASE BANK, N.A.	3rd First National Plaza Chicago, IL 60602	William Sholten 312-732-4600 william.sholten@jpmorgan.com	GMAC Mortgage, LLC	Custodial
3041	796681849	JPMORGAN CHASE BANK, N.A.	3rd First National Plaza Chicago, IL 60602	William Sholten 312-732-4600 william.sholten@jpmorgan.com	GMAC Mortgage, LLC	Custodial
3042	796681856	JPMORGAN CHASE BANK, N.A.	3rd First National Plaza Chicago, IL 60602	William Sholten 312-732-4600 william.sholten@jpmorgan.com	GMAC Mortgage, LLC	Custodial
3043	796681864	JPMORGAN CHASE BANK, N.A.	3rd First National Plaza Chicago, IL 60602	William Sholten 312-732-4600 william.sholten@jpmorgan.com	GMAC Mortgage, LLC	Custodial
3044	796681872	JPMORGAN CHASE BANK, N.A.	3rd First National Plaza Chicago, IL 60602	William Sholten 312-732-4600 william.sholten@jpmorgan.com	GMAC Mortgage, LLC	Custodial
3045	796681880	JPMORGAN CHASE BANK, N.A.	3rd First National Plaza Chicago, IL 60602	William Sholten 312-732-4600 william.sholten@jpmorgan.com	GMAC Mortgage, LLC	Custodial
3046	796681898	JPMORGAN CHASE BANK, N.A.	3rd First National Plaza Chicago, IL 60602	William Sholten 312-732-4600 william.sholten@jpmorgan.com	GMAC Mortgage, LLC	Custodial
3047	796681906	JPMORGAN CHASE BANK, N.A.	3rd First National Plaza Chicago, IL 60602	William Sholten 312-732-4600 william.sholten@jpmorgan.com	GMAC Mortgage, LLC	Custodial
3048	796681914	JPMORGAN CHASE BANK, N.A.	3rd First National Plaza Chicago, IL 60602	William Sholten 312-732-4600 william.sholten@jpmorgan.com	GMAC Mortgage, LLC	Custodial
3049	796681922	JPMORGAN CHASE BANK, N.A.	3rd First National Plaza Chicago, IL 60602	William Sholten 312-732-4600 william.sholten@jpmorgan.com	GMAC Mortgage, LLC	Custodial
3050	796681930	JPMORGAN CHASE BANK, N.A.	3rd First National Plaza Chicago, IL 60602	William Sholten 312-732-4600 william.sholten@jpmorgan.com	GMAC Mortgage, LLC	Custodial
3051	796681948	JPMORGAN CHASE BANK, N.A.	3rd First National Plaza Chicago, IL 60602	William Sholten 312-732-4600 william.sholten@jpmorgan.com	GMAC Mortgage, LLC	Custodial
3052	796681955	JPMORGAN CHASE BANK, N.A.	3rd First National Plaza Chicago, IL 60602	William Sholten 312-732-4600 william.sholten@jpmorgan.com	GMAC Mortgage, LLC	Custodial
3053	796681963	JPMORGAN CHASE BANK, N.A.	3rd First National Plaza Chicago, IL 60602	William Sholten 312-732-4600 william.sholten@jpmorgan.com	GMAC Mortgage, LLC	Custodial

Privileged and Confidential

Exhibit B - Bank Accounts

Ref #	Account Number	Bank	Address	Contact	Corporate/Company Code	Account Type
3054	796681971	JPMORGAN CHASE BANK, N.A.	3rd First National Plaza Chicago, IL 60602	William Sholten 312-732-4600 william.sholten@jpmorgan.com	GMAC Mortgage, LLC	Custodial
3055	796681989	JPMORGAN CHASE BANK, N.A.	3rd First National Plaza Chicago, IL 60602	William Sholten 312-732-4600 william.sholten@jpmorgan.com	GMAC Mortgage, LLC	Custodial
3056	796681997	JPMORGAN CHASE BANK, N.A.	3rd First National Plaza Chicago, IL 60602	William Sholten 312-732-4600 william.sholten@jpmorgan.com	GMAC Mortgage, LLC	Custodial
3057	796682003	JPMORGAN CHASE BANK, N.A.	3rd First National Plaza Chicago, IL 60602	William Sholten 312-732-4600 william.sholten@jpmorgan.com	GMAC Mortgage, LLC	Custodial
3058	796682011	JPMORGAN CHASE BANK, N.A.	3rd First National Plaza Chicago, IL 60602	William Sholten 312-732-4600 william.sholten@jpmorgan.com	GMAC Mortgage, LLC	Custodial
3059	796682029	JPMORGAN CHASE BANK, N.A.	3rd First National Plaza Chicago, IL 60602	William Sholten 312-732-4600 william.sholten@jpmorgan.com	GMAC Mortgage, LLC	Custodial
3060	796682037	JPMORGAN CHASE BANK, N.A.	3rd First National Plaza Chicago, IL 60602	William Sholten 312-732-4600 william.sholten@jpmorgan.com	GMAC Mortgage, LLC	Custodial
3061	796682045	JPMORGAN CHASE BANK, N.A.	3rd First National Plaza Chicago, IL 60602	William Sholten 312-732-4600 william.sholten@jpmorgan.com	GMAC Mortgage, LLC	Custodial
3062	796682060	JPMORGAN CHASE BANK, N.A.	3rd First National Plaza Chicago, IL 60602	William Sholten 312-732-4600 william.sholten@jpmorgan.com	GMAC Mortgage, LLC	Custodial
3063	796682078	JPMORGAN CHASE BANK, N.A.	3rd First National Plaza Chicago, IL 60602	William Sholten 312-732-4600 william.sholten@jpmorgan.com	GMAC Mortgage, LLC	Custodial
3064	796682094	JPMORGAN CHASE BANK, N.A.	3rd First National Plaza Chicago, IL 60602	William Sholten 312-732-4600 william.sholten@jpmorgan.com	GMAC Mortgage, LLC	Custodial
3065	796682102	JPMORGAN CHASE BANK, N.A.	3rd First National Plaza Chicago, IL 60602	William Sholten 312-732-4600 william.sholten@jpmorgan.com	GMAC Mortgage, LLC	Custodial
3066	796682110	JPMORGAN CHASE BANK, N.A.	3rd First National Plaza Chicago, IL 60602	William Sholten 312-732-4600 william.sholten@jpmorgan.com	GMAC Mortgage, LLC	Custodial
3067	796682128	JPMORGAN CHASE BANK, N.A.	3rd First National Plaza Chicago, IL 60602	William Sholten 312-732-4600 william.sholten@jpmorgan.com	GMAC Mortgage, LLC	Custodial
3068	796682136	JPMORGAN CHASE BANK, N.A.	3rd First National Plaza Chicago, IL 60602	William Sholten 312-732-4600 william.sholten@jpmorgan.com	GMAC Mortgage, LLC	Custodial
3069	796682144	JPMORGAN CHASE BANK, N.A.	3rd First National Plaza Chicago, IL 60602	William Sholten 312-732-4600 william.sholten@jpmorgan.com	GMAC Mortgage, LLC	Custodial
3070	796682151	JPMORGAN CHASE BANK, N.A.	3rd First National Plaza Chicago, IL 60602	William Sholten 312-732-4600 william.sholten@jpmorgan.com	GMAC Mortgage, LLC	Custodial
3071	796682169	JPMORGAN CHASE BANK, N.A.	3rd First National Plaza Chicago, IL 60602	William Sholten 312-732-4600 william.sholten@jpmorgan.com	Residential Funding Company, LLC	Operating - General
3072	796682177	JPMORGAN CHASE BANK, N.A.	3rd First National Plaza Chicago, IL 60602	William Sholten 312-732-4600 william.sholten@jpmorgan.com	GMAC Mortgage, LLC	Custodial
3073	796682185	JPMORGAN CHASE BANK, N.A.	3rd First National Plaza Chicago, IL 60602	William Sholten 312-732-4600 william.sholten@jpmorgan.com	GMAC Mortgage, LLC	Custodial
3074	796682193	JPMORGAN CHASE BANK, N.A.	3rd First National Plaza Chicago, IL 60602	William Sholten 312-732-4600 william.sholten@jpmorgan.com	GMAC Mortgage, LLC	Custodial
3075	796682201	JPMORGAN CHASE BANK, N.A.	3rd First National Plaza Chicago, IL 60602	William Sholten 312-732-4600 william.sholten@jpmorgan.com	GMAC Mortgage, LLC	Custodial
3076	796682219	JPMORGAN CHASE BANK, N.A.	3rd First National Plaza Chicago, IL 60602	William Sholten 312-732-4600 william.sholten@jpmorgan.com	GMAC Mortgage, LLC	Custodial
3077	796682227	JPMORGAN CHASE BANK, N.A.	3rd First National Plaza Chicago, IL 60602	William Sholten 312-732-4600 william.sholten@jpmorgan.com	GMAC Mortgage, LLC	Custodial
3078	796682235	JPMORGAN CHASE BANK, N.A.	3rd First National Plaza Chicago, IL 60602	William Sholten 312-732-4600 william.sholten@jpmorgan.com	GMAC Mortgage, LLC	Custodial
3079	796682243	JPMORGAN CHASE BANK, N.A.	3rd First National Plaza Chicago, IL 60602	William Sholten 312-732-4600 william.sholten@jpmorgan.com	GMAC Mortgage, LLC	Custodial
3080	796682250	JPMORGAN CHASE BANK, N.A.	3rd First National Plaza Chicago, IL 60602	William Sholten 312-732-4600 william.sholten@jpmorgan.com	GMAC Mortgage, LLC	Custodial
3081	796682268	JPMORGAN CHASE BANK, N.A.	3rd First National Plaza Chicago, IL 60602	William Sholten 312-732-4600 william.sholten@jpmorgan.com	GMAC Mortgage, LLC	Custodial
3082	796682276	JPMORGAN CHASE BANK, N.A.	3rd First National Plaza Chicago, IL 60602	William Sholten 312-732-4600 william.sholten@jpmorgan.com	GMAC Mortgage, LLC	Custodial
3083	796682284	JPMORGAN CHASE BANK, N.A.	3rd First National Plaza Chicago, IL 60602	William Sholten 312-732-4600 william.sholten@jpmorgan.com	GMAC Mortgage, LLC	Custodial
3084	796682292	JPMORGAN CHASE BANK, N.A.	3rd First National Plaza Chicago, IL 60602	William Sholten 312-732-4600 william.sholten@jpmorgan.com	GMAC Mortgage, LLC	Custodial
3085	796682300	JPMORGAN CHASE BANK, N.A.	3rd First National Plaza Chicago, IL 60602	William Sholten 312-732-4600 william.sholten@jpmorgan.com	GMAC Mortgage, LLC	Custodial
3086	796682318	JPMORGAN CHASE BANK, N.A.	3rd First National Plaza Chicago, IL 60602	William Sholten 312-732-4600 william.sholten@jpmorgan.com	GMAC Mortgage, LLC	Custodial
3087	796682326	JPMORGAN CHASE BANK, N.A.	3rd First National Plaza Chicago, IL 60602	William Sholten 312-732-4600 william.sholten@jpmorgan.com	GMAC Mortgage, LLC	Custodial
3088	796682334	JPMORGAN CHASE BANK, N.A.	3rd First National Plaza Chicago, IL 60602	William Sholten 312-732-4600 william.sholten@jpmorgan.com	GMAC Mortgage, LLC	Custodial
3089	796682342	JPMORGAN CHASE BANK, N.A.	3rd First National Plaza Chicago, IL 60602	William Sholten 312-732-4600 william.sholten@jpmorgan.com	GMAC Mortgage, LLC	Custodial
3090	796682359	JPMORGAN CHASE BANK, N.A.	3rd First National Plaza Chicago, IL 60602	William Sholten 312-732-4600 william.sholten@jpmorgan.com	GMAC Mortgage, LLC	Custodial
3091	796682367	JPMORGAN CHASE BANK, N.A.	3rd First National Plaza Chicago, IL 60602	William Sholten 312-732-4600 william.sholten@jpmorgan.com	GMAC Mortgage, LLC	Custodial
3092	796682375	JPMORGAN CHASE BANK, N.A.	3rd First National Plaza Chicago, IL 60602	William Sholten 312-732-4600 william.sholten@jpmorgan.com	GMAC Mortgage, LLC	Custodial
3093	796682383	JPMORGAN CHASE BANK, N.A.	3rd First National Plaza Chicago, IL 60602	William Sholten 312-732-4600 william.sholten@jpmorgan.com	GMAC Mortgage, LLC	Custodial
3094	796682391	JPMORGAN CHASE BANK, N.A.	3rd First National Plaza Chicago, IL 60602	William Sholten 312-732-4600 william.sholten@jpmorgan.com	GMAC Mortgage, LLC	Custodial
3095	796682409	JPMORGAN CHASE BANK, N.A.	3rd First National Plaza Chicago, IL 60602	William Sholten 312-732-4600 william.sholten@jpmorgan.com	GMAC Mortgage, LLC	Custodial
3096	796682417	JPMORGAN CHASE BANK, N.A.	3rd First National Plaza Chicago, IL 60602	William Sholten 312-732-4600 william.sholten@jpmorgan.com	GMAC Mortgage, LLC	Custodial

Privileged and Confidential

Exhibit B - Bank Accounts

Ref #	Account Number	Bank	Address	Contact	Corporate/Company Code	Account Type
3097	796682425	JPMORGAN CHASE BANK, N.A.	3rd First National Plaza Chicago, IL 60602	William Sholten 312-732-4600 william.sholten@jpmorgan.com	GMAC Mortgage, LLC	Custodial
3098	796682433	JPMORGAN CHASE BANK, N.A.	3rd First National Plaza Chicago, IL 60602	William Sholten 312-732-4600 william.sholten@jpmorgan.com	GMAC Mortgage, LLC	Custodial
3099	796682441	JPMORGAN CHASE BANK, N.A.	3rd First National Plaza Chicago, IL 60602	William Sholten 312-732-4600 william.sholten@jpmorgan.com	GMAC Mortgage, LLC	Custodial
3100	796682458	JPMORGAN CHASE BANK, N.A.	3rd First National Plaza Chicago, IL 60602	William Sholten 312-732-4600 william.sholten@jpmorgan.com	GMAC Mortgage, LLC	Custodial
3101	796682466	JPMORGAN CHASE BANK, N.A.	3rd First National Plaza Chicago, IL 60602	William Sholten 312-732-4600 william.sholten@jpmorgan.com	GMAC Mortgage, LLC	Custodial
3102	796682474	JPMORGAN CHASE BANK, N.A.	3rd First National Plaza Chicago, IL 60602	William Sholten 312-732-4600 william.sholten@jpmorgan.com	GMAC Mortgage, LLC	Custodial
3103	796682482	JPMORGAN CHASE BANK, N.A.	3rd First National Plaza Chicago, IL 60602	William Sholten 312-732-4600 william.sholten@jpmorgan.com	GMAC Mortgage, LLC	Operating - General
3104	796682490	JPMORGAN CHASE BANK, N.A.	3rd First National Plaza Chicago, IL 60602	William Sholten 312-732-4600 william.sholten@jpmorgan.com	GMAC Mortgage, LLC	Custodial
3105	796682508	JPMORGAN CHASE BANK, N.A.	3rd First National Plaza Chicago, IL 60602	William Sholten 312-732-4600 william.sholten@jpmorgan.com	GMAC Mortgage, LLC	Custodial
3106	796682516	JPMORGAN CHASE BANK, N.A.	3rd First National Plaza Chicago, IL 60602	William Sholten 312-732-4600 william.sholten@jpmorgan.com	GMAC Mortgage, LLC	Custodial
3107	796682524	JPMORGAN CHASE BANK, N.A.	3rd First National Plaza Chicago, IL 60602	William Sholten 312-732-4600 william.sholten@jpmorgan.com	GMAC Mortgage, LLC	Custodial
3108	796682540	JPMORGAN CHASE BANK, N.A.	3rd First National Plaza Chicago, IL 60602	William Sholten 312-732-4600 william.sholten@jpmorgan.com	GMAC Mortgage, LLC	Operating - Other
3109	796682557	JPMORGAN CHASE BANK, N.A.	3rd First National Plaza Chicago, IL 60602	William Sholten 312-732-4600 william.sholten@jpmorgan.com	Residential Funding Company, LLC	Operating - Concentration
3110	796682565	JPMORGAN CHASE BANK, N.A.	3rd First National Plaza Chicago, IL 60602	William Sholten 312-732-4600 william.sholten@jpmorgan.com	GMAC Mortgage, LLC	Operating - Receipt
3111	796682573	JPMORGAN CHASE BANK, N.A.	3rd First National Plaza Chicago, IL 60602	William Sholten 312-732-4600 william.sholten@jpmorgan.com	GMAC Mortgage, LLC	Operating - Disbursement
3112	796682581	JPMORGAN CHASE BANK, N.A.	3rd First National Plaza Chicago, IL 60602	William Sholten 312-732-4600 william.sholten@jpmorgan.com	Ditech, LLC	Restricted Cash - Depository
3113	796682599	JPMORGAN CHASE BANK, N.A.	3rd First National Plaza Chicago, IL 60602	William Sholten 312-732-4600 william.sholten@jpmorgan.com	Residential Capital, LLC	Operating - Concentration
3114	796682607	JPMORGAN CHASE BANK, N.A.	3rd First National Plaza Chicago, IL 60602	William Sholten 312-732-4600 william.sholten@jpmorgan.com	GMAC Mortgage, LLC	Custodial
3115	796682615	JPMORGAN CHASE BANK, N.A.	3rd First National Plaza Chicago, IL 60602	William Sholten 312-732-4600 william.sholten@jpmorgan.com	GMAC Mortgage, LLC	Operating - Concentration
3116	796682623	JPMORGAN CHASE BANK, N.A.	3rd First National Plaza Chicago, IL 60602	William Sholten 312-732-4600 william.sholten@jpmorgan.com	GMAC Mortgage, LLC	Operating - Other
3117	796682631	JPMORGAN CHASE BANK, N.A.	3rd First National Plaza Chicago, IL 60602	William Sholten 312-732-4600 william.sholten@jpmorgan.com	GMAC Mortgage, LLC	Operating - Concentration
3118	796682649	JPMORGAN CHASE BANK, N.A.	3rd First National Plaza Chicago, IL 60602	William Sholten 312-732-4600 william.sholten@jpmorgan.com	GMAC Mortgage, LLC	Operating - Concentration
3119	796682656	JPMORGAN CHASE BANK, N.A.	3rd First National Plaza Chicago, IL 60602	William Sholten 312-732-4600 william.sholten@jpmorgan.com	GMAC Mortgage, LLC	Operating - Concentration
3120	796682664	JPMORGAN CHASE BANK, N.A.	3rd First National Plaza Chicago, IL 60602	William Sholten 312-732-4600 william.sholten@jpmorgan.com	GMAC Mortgage, LLC	Custodial
3121	796682672	JPMORGAN CHASE BANK, N.A.	3rd First National Plaza Chicago, IL 60602	William Sholten 312-732-4600 william.sholten@jpmorgan.com	Residential Capital, LLC	Operating - Concentration
3122	796682698	JPMORGAN CHASE BANK, N.A.	3rd First National Plaza Chicago, IL 60602	William Sholten 312-732-4600 william.sholten@jpmorgan.com	Residential Capital, LLC	Operating - Concentration
3123	796682706	JPMORGAN CHASE BANK, N.A.	3rd First National Plaza Chicago, IL 60602	William Sholten 312-732-4600 william.sholten@jpmorgan.com	Residential Capital, LLC	Operating - Concentration
3124	796682714	JPMORGAN CHASE BANK, N.A.	3rd First National Plaza Chicago, IL 60602	William Sholten 312-732-4600 william.sholten@jpmorgan.com	Passive Asset Transactions LLC	Operating - Concentration
3125	796682722	JPMORGAN CHASE BANK, N.A.	3rd First National Plaza Chicago, IL 60602	William Sholten 312-732-4600 william.sholten@jpmorgan.com	Passive Asset Transactions LLC	Operating - Concentration
3126	796682730	JPMORGAN CHASE BANK, N.A.	3rd First National Plaza Chicago, IL 60602	William Sholten 312-732-4600 william.sholten@jpmorgan.com	Residential Funding Company, LLC	Operating - Concentration
3127	796682748	JPMORGAN CHASE BANK, N.A.	3rd First National Plaza Chicago, IL 60602	William Sholten 312-732-4600 william.sholten@jpmorgan.com	Residential Funding Company, LLC	Operating - Concentration
3128	796682755	JPMORGAN CHASE BANK, N.A.	3rd First National Plaza Chicago, IL 60602	William Sholten 312-732-4600 william.sholten@jpmorgan.com	Residential Funding Company, LLC	Operating - Concentration
3129	796682763	JPMORGAN CHASE BANK, N.A.	3rd First National Plaza Chicago, IL 60602	William Sholten 312-732-4600 william.sholten@jpmorgan.com	Residential Funding Company, LLC	Operating - General
3130	796682771	JPMORGAN CHASE BANK, N.A.	3rd First National Plaza Chicago, IL 60602	William Sholten 312-732-4600 william.sholten@jpmorgan.com	Residential Funding Company, LLC	Operating - Concentration
3131	796682789	JPMORGAN CHASE BANK, N.A.	3rd First National Plaza Chicago, IL 60602	William Sholten 312-732-4600 william.sholten@jpmorgan.com	Homecomings Financial Real Estate Holdings, LLC	Operating - Concentration
3132	796682797	JPMORGAN CHASE BANK, N.A.	3rd First National Plaza Chicago, IL 60602	William Sholten 312-732-4600 william.sholten@jpmorgan.com	Residential Funding Real Estate Holdings, LLC	Operating - Concentration
3133	796682805	JPMORGAN CHASE BANK, N.A.	3rd First National Plaza Chicago, IL 60602	William Sholten 312-732-4600 william.sholten@jpmorgan.com	RFC Asset Holdings II, LLC	Operating - Collection
3134	796682813	JPMORGAN CHASE BANK, N.A.	3rd First National Plaza Chicago, IL 60602	William Sholten 312-732-4600 william.sholten@jpmorgan.com	RFC Asset Holdings II, LLC	Operating - Concentration
3135	796682821	JPMORGAN CHASE BANK, N.A.	3rd First National Plaza Chicago, IL 60602	William Sholten 312-732-4600 william.sholten@jpmorgan.com	Residential Funding Company, LLC	Operating - Concentration
3136	796682839	JPMORGAN CHASE BANK, N.A.	3rd First National Plaza Chicago, IL 60602	William Sholten 312-732-4600 william.sholten@jpmorgan.com	Residential Consumer Services, LLC	Operating - Disbursement
3137	796682854	JPMORGAN CHASE BANK, N.A.	3rd First National Plaza Chicago, IL 60602	William Sholten 312-732-4600 william.sholten@jpmorgan.com	GMAC Mortgage, LLC	Operating - Concentration
3138	796682862	JPMORGAN CHASE BANK, N.A.	3rd First National Plaza Chicago, IL 60602	William Sholten 312-732-4600 william.sholten@jpmorgan.com	GMAC Mortgage, LLC	Operating - Concentration
3139	796682870	JPMORGAN CHASE BANK, N.A.	3rd First National Plaza Chicago, IL 60602	William Sholten 312-732-4600 william.sholten@jpmorgan.com	Residential Mortgage Real Estate Holdings, LLC	Operating - Collection

Privileged and Confidential

Exhibit B - Bank Accounts

Ref #	Account Number	Bank	Address	Contact	Corporate/Company Code	Account Type
3140	796682888	JPMORGAN CHASE BANK, N.A.	3rd First National Plaza Chicago, IL 60602	William Sholten 312-732-4600 william.sholten@jpmorgan.com	GMAC Mortgage, LLC	Custodial
3141	796682896	JPMORGAN CHASE BANK, N.A.	3rd First National Plaza Chicago, IL 60602	William Sholten 312-732-4600 william.sholten@jpmorgan.com	GMAC Mortgage, LLC	Custodial
3142	887420198	JPMORGAN CHASE BANK, N.A.	3rd First National Plaza Chicago, IL 60602	William Sholten 312-732-4600 william.sholten@jpmorgan.com	GMAC Mortgage, LLC	Operating - Custody
3143	887420206	JPMORGAN CHASE BANK, N.A.	3rd First National Plaza Chicago, IL 60602	William Sholten 312-732-4600 william.sholten@jpmorgan.com	GMAC Mortgage, LLC	Operating - Custody
3144	1611209394	JPMORGAN CHASE BANK, N.A.	3rd First National Plaza Chicago, IL 60602	William Sholten 312-732-4600 william.sholten@jpmorgan.com	GMAC Mortgage, LLC	Custodial
3145	1611209402	JPMORGAN CHASE BANK, N.A.	3rd First National Plaza Chicago, IL 60602	William Sholten 312-732-4600 william.sholten@jpmorgan.com	GMAC Mortgage, LLC	Custodial
3146	1611209410	JPMORGAN CHASE BANK, N.A.	3rd First National Plaza Chicago, IL 60602	William Sholten 312-732-4600 william.sholten@jpmorgan.com	GMAC Mortgage, LLC	Custodial
3147	1611209428	JPMORGAN CHASE BANK, N.A.	3rd First National Plaza Chicago, IL 60602	William Sholten 312-732-4600 william.sholten@jpmorgan.com	GMAC Mortgage, LLC	Custodial
3148	1611209436	JPMORGAN CHASE BANK, N.A.	3rd First National Plaza Chicago, IL 60602	William Sholten 312-732-4600 william.sholten@jpmorgan.com	GMAC Mortgage, LLC	Custodial
3149	1613889193	JPMORGAN CHASE BANK, N.A.	3rd First National Plaza Chicago, IL 60602	William Sholten 312-732-4600 william.sholten@jpmorgan.com	GMAC Mortgage, LLC	Custodial
3150	1613889268	JPMORGAN CHASE BANK, N.A.	3rd First National Plaza Chicago, IL 60602	William Sholten 312-732-4600 william.sholten@jpmorgan.com	GMAC Mortgage, LLC	Custodial
3151	1613889276	JPMORGAN CHASE BANK, N.A.	3rd First National Plaza Chicago, IL 60602	William Sholten 312-732-4600 william.sholten@jpmorgan.com	GMAC Mortgage, LLC	Custodial
3152	1613889284	JPMORGAN CHASE BANK, N.A.	3rd First National Plaza Chicago, IL 60602	William Sholten 312-732-4600 william.sholten@jpmorgan.com	GMAC Mortgage, LLC	Custodial
3153	1613889292	JPMORGAN CHASE BANK, N.A.	3rd First National Plaza Chicago, IL 60602	William Sholten 312-732-4600 william.sholten@jpmorgan.com	GMAC Mortgage, LLC	Custodial
3154	1613889300	JPMORGAN CHASE BANK, N.A.	3rd First National Plaza Chicago, IL 60602	William Sholten 312-732-4600 william.sholten@jpmorgan.com	GMAC Mortgage, LLC	Custodial
3155	1613889318	JPMORGAN CHASE BANK, N.A.	3rd First National Plaza Chicago, IL 60602	William Sholten 312-732-4600 william.sholten@jpmorgan.com	GMAC Mortgage, LLC	Custodial
3156	1613889326	JPMORGAN CHASE BANK, N.A.	3rd First National Plaza Chicago, IL 60602	William Sholten 312-732-4600 william.sholten@jpmorgan.com	GMAC Mortgage, LLC	Custodial
3157	1613889367	JPMORGAN CHASE BANK, N.A.	3rd First National Plaza Chicago, IL 60602	William Sholten 312-732-4600 william.sholten@jpmorgan.com	GMAC Mortgage, LLC	Custodial
3158	1613889375	JPMORGAN CHASE BANK, N.A.	3rd First National Plaza Chicago, IL 60602	William Sholten 312-732-4600 william.sholten@jpmorgan.com	GMAC Mortgage, LLC	Custodial
3159	1613889417	JPMORGAN CHASE BANK, N.A.	3rd First National Plaza Chicago, IL 60602	William Sholten 312-732-4600 william.sholten@jpmorgan.com	GMAC Mortgage, LLC	Custodial
3160	1613889441	JPMORGAN CHASE BANK, N.A.	3rd First National Plaza Chicago, IL 60602	William Sholten 312-732-4600 william.sholten@jpmorgan.com	GMAC Mortgage, LLC	Custodial
3161	1613889458	JPMORGAN CHASE BANK, N.A.	3rd First National Plaza Chicago, IL 60602	William Sholten 312-732-4600 william.sholten@jpmorgan.com	GMAC Mortgage, LLC	Custodial
3162	1613889466	JPMORGAN CHASE BANK, N.A.	3rd First National Plaza Chicago, IL 60602	William Sholten 312-732-4600 william.sholten@jpmorgan.com	GMAC Mortgage, LLC	Custodial
3163	1613889474	JPMORGAN CHASE BANK, N.A.	3rd First National Plaza Chicago, IL 60602	William Sholten 312-732-4600 william.sholten@jpmorgan.com	GMAC Mortgage, LLC	Custodial
3164	1614887923	JPMORGAN CHASE BANK, N.A.	3rd First National Plaza Chicago, IL 60602	William Sholten 312-732-4600 william.sholten@jpmorgan.com	GMAC Mortgage, LLC	Custodial
3165	1614887949	JPMORGAN CHASE BANK, N.A.	3rd First National Plaza Chicago, IL 60602	William Sholten 312-732-4600 william.sholten@jpmorgan.com	GMAC Mortgage, LLC	Custodial
3166	1614887956	JPMORGAN CHASE BANK, N.A.	3rd First National Plaza Chicago, IL 60602	William Sholten 312-732-4600 william.sholten@jpmorgan.com	GMAC Mortgage, LLC	Custodial
3167	1614887964	JPMORGAN CHASE BANK, N.A.	3rd First National Plaza Chicago, IL 60602	William Sholten 312-732-4600 william.sholten@jpmorgan.com	GMAC Mortgage, LLC	Custodial
3168	1614887972	JPMORGAN CHASE BANK, N.A.	3rd First National Plaza Chicago, IL 60602	William Sholten 312-732-4600 william.sholten@jpmorgan.com	GMAC Mortgage, LLC	Custodial
3169	1614887998	JPMORGAN CHASE BANK, N.A.	3rd First National Plaza Chicago, IL 60602	William Sholten 312-732-4600 william.sholten@jpmorgan.com	GMAC Mortgage, LLC	Custodial
3170	1614888020	JPMORGAN CHASE BANK, N.A.	3rd First National Plaza Chicago, IL 60602	William Sholten 312-732-4600 william.sholten@jpmorgan.com	GMAC Mortgage, LLC	Custodial
3171	1614888046	JPMORGAN CHASE BANK, N.A.	3rd First National Plaza Chicago, IL 60602	William Sholten 312-732-4600 william.sholten@jpmorgan.com	GMAC Mortgage, LLC	Custodial
3172	1614888053	JPMORGAN CHASE BANK, N.A.	3rd First National Plaza Chicago, IL 60602	William Sholten 312-732-4600 william.sholten@jpmorgan.com	GMAC Mortgage, LLC	Custodial
3173	1614888061	JPMORGAN CHASE BANK, N.A.	3rd First National Plaza Chicago, IL 60602	William Sholten 312-732-4600 william.sholten@jpmorgan.com	GMAC Mortgage, LLC	Custodial
3174	1614888079	JPMORGAN CHASE BANK, N.A.	3rd First National Plaza Chicago, IL 60602	William Sholten 312-732-4600 william.sholten@jpmorgan.com	GMAC Mortgage, LLC	Custodial
3175	1614888087	JPMORGAN CHASE BANK, N.A.	3rd First National Plaza Chicago, IL 60602	William Sholten 312-732-4600 william.sholten@jpmorgan.com	GMAC Mortgage, LLC	Custodial
3176	1614888103	JPMORGAN CHASE BANK, N.A.	3rd First National Plaza Chicago, IL 60602	William Sholten 312-732-4600 william.sholten@jpmorgan.com	GMAC Mortgage, LLC	Custodial
3177	1614888129	JPMORGAN CHASE BANK, N.A.	3rd First National Plaza Chicago, IL 60602	William Sholten 312-732-4600 william.sholten@jpmorgan.com	GMAC Mortgage, LLC	Custodial
3178	1614888137	JPMORGAN CHASE BANK, N.A.	3rd First National Plaza Chicago, IL 60602	William Sholten 312-732-4600 william.sholten@jpmorgan.com	GMAC Mortgage, LLC	Custodial
3179	1614888145	JPMORGAN CHASE BANK, N.A.	3rd First National Plaza Chicago, IL 60602	William Sholten 312-732-4600 william.sholten@jpmorgan.com	GMAC Mortgage, LLC	Custodial
3180	1614888228	JPMORGAN CHASE BANK, N.A.	3rd First National Plaza Chicago, IL 60602	William Sholten 312-732-4600 william.sholten@jpmorgan.com	GMAC Mortgage, LLC	Custodial
3181	1614888244	JPMORGAN CHASE BANK, N.A.	3rd First National Plaza Chicago, IL 60602	William Sholten 312-732-4600 william.sholten@jpmorgan.com	GMAC Mortgage, LLC	Custodial
3182	1614888251	JPMORGAN CHASE BANK, N.A.	3rd First National Plaza Chicago, IL 60602	William Sholten 312-732-4600 william.sholten@jpmorgan.com	GMAC Mortgage, LLC	Custodial

Privileged and Confidential

Exhibit B - Bank Accounts

Ref #	Account Number	Bank	Address	Contact	Corporate/Company Code	Account Type
3183	1614888301	JPMORGAN CHASE BANK, N.A.	3rd First National Plaza Chicago, IL 60602	William Sholten 312-732-4600 william.sholten@jpmorgan.com	GMAC Mortgage, LLC	Custodial
3184	1614888343	JPMORGAN CHASE BANK, N.A.	3rd First National Plaza Chicago, IL 60602	William Sholten 312-732-4600 william.sholten@jpmorgan.com	GMAC Mortgage, LLC	Custodial
3185	1614888350	JPMORGAN CHASE BANK, N.A.	3rd First National Plaza Chicago, IL 60602	William Sholten 312-732-4600 william.sholten@jpmorgan.com	GMAC Mortgage, LLC	Custodial
3186	1614888368	JPMORGAN CHASE BANK, N.A.	3rd First National Plaza Chicago, IL 60602	William Sholten 312-732-4600 william.sholten@jpmorgan.com	GMAC Mortgage, LLC	Custodial
3187	1614888376	JPMORGAN CHASE BANK, N.A.	3rd First National Plaza Chicago, IL 60602	William Sholten 312-732-4600 william.sholten@jpmorgan.com	GMAC Mortgage, LLC	Custodial
3188	1614888384	JPMORGAN CHASE BANK, N.A.	3rd First National Plaza Chicago, IL 60602	William Sholten 312-732-4600 william.sholten@jpmorgan.com	GMAC Mortgage, LLC	Custodial
3189	1614888392	JPMORGAN CHASE BANK, N.A.	3rd First National Plaza Chicago, IL 60602	William Sholten 312-732-4600 william.sholten@jpmorgan.com	GMAC Mortgage, LLC	Custodial
3190	1614888400	JPMORGAN CHASE BANK, N.A.	3rd First National Plaza Chicago, IL 60602	William Sholten 312-732-4600 william.sholten@jpmorgan.com	GMAC Mortgage, LLC	Custodial
3191	1614888418	JPMORGAN CHASE BANK, N.A.	3rd First National Plaza Chicago, IL 60602	William Sholten 312-732-4600 william.sholten@jpmorgan.com	GMAC Mortgage, LLC	Custodial
3192	1614888426	JPMORGAN CHASE BANK, N.A.	3rd First National Plaza Chicago, IL 60602	William Sholten 312-732-4600 william.sholten@jpmorgan.com	GMAC Mortgage, LLC	Custodial
3193	1614888459	JPMORGAN CHASE BANK, N.A.	3rd First National Plaza Chicago, IL 60602	William Sholten 312-732-4600 william.sholten@jpmorgan.com	GMAC Mortgage, LLC	Custodial
3194	1614888467	JPMORGAN CHASE BANK, N.A.	3rd First National Plaza Chicago, IL 60602	William Sholten 312-732-4600 william.sholten@jpmorgan.com	GMAC Mortgage, LLC	Custodial
3195	1614888483	JPMORGAN CHASE BANK, N.A.	3rd First National Plaza Chicago, IL 60602	William Sholten 312-732-4600 william.sholten@jpmorgan.com	GMAC Mortgage, LLC	Custodial
3196	1614888509	JPMORGAN CHASE BANK, N.A.	3rd First National Plaza Chicago, IL 60602	William Sholten 312-732-4600 william.sholten@jpmorgan.com	GMAC Mortgage, LLC	Custodial
3197	1614888517	JPMORGAN CHASE BANK, N.A.	3rd First National Plaza Chicago, IL 60602	William Sholten 312-732-4600 william.sholten@jpmorgan.com	GMAC Mortgage, LLC	Custodial
3198	1614888525	JPMORGAN CHASE BANK, N.A.	3rd First National Plaza Chicago, IL 60602	William Sholten 312-732-4600 william.sholten@jpmorgan.com	GMAC Mortgage, LLC	Custodial
3199	1614888533	JPMORGAN CHASE BANK, N.A.	3rd First National Plaza Chicago, IL 60602	William Sholten 312-732-4600 william.sholten@jpmorgan.com	GMAC Mortgage, LLC	Custodial
3200	1614888541	JPMORGAN CHASE BANK, N.A.	3rd First National Plaza Chicago, IL 60602	William Sholten 312-732-4600 william.sholten@jpmorgan.com	GMAC Mortgage, LLC	Custodial
3201	1614888582	JPMORGAN CHASE BANK, N.A.	3rd First National Plaza Chicago, IL 60602	William Sholten 312-732-4600 william.sholten@jpmorgan.com	GMAC Mortgage, LLC	Custodial
3202	1614888590	JPMORGAN CHASE BANK, N.A.	3rd First National Plaza Chicago, IL 60602	William Sholten 312-732-4600 william.sholten@jpmorgan.com	GMAC Mortgage, LLC	Custodial
3203	1614888616	JPMORGAN CHASE BANK, N.A.	3rd First National Plaza Chicago, IL 60602	William Sholten 312-732-4600 william.sholten@jpmorgan.com	GMAC Mortgage, LLC	Custodial
3204	1614888657	JPMORGAN CHASE BANK, N.A.	3rd First National Plaza Chicago, IL 60602	William Sholten 312-732-4600 william.sholten@jpmorgan.com	GMAC Mortgage, LLC	Custodial
3205	1614888673	JPMORGAN CHASE BANK, N.A.	3rd First National Plaza Chicago, IL 60602	William Sholten 312-732-4600 william.sholten@jpmorgan.com	GMAC Mortgage, LLC	Custodial
3206	1614888681	JPMORGAN CHASE BANK, N.A.	3rd First National Plaza Chicago, IL 60602	William Sholten 312-732-4600 william.sholten@jpmorgan.com	GMAC Mortgage, LLC	Custodial
3207	1614888715	JPMORGAN CHASE BANK, N.A.	3rd First National Plaza Chicago, IL 60602	William Sholten 312-732-4600 william.sholten@jpmorgan.com	GMAC Mortgage, LLC	Custodial
3208	1614888772	JPMORGAN CHASE BANK, N.A.	3rd First National Plaza Chicago, IL 60602	William Sholten 312-732-4600 william.sholten@jpmorgan.com	GMAC Mortgage, LLC	Custodial
3209	1614888798	JPMORGAN CHASE BANK, N.A.	3rd First National Plaza Chicago, IL 60602	William Sholten 312-732-4600 william.sholten@jpmorgan.com	GMAC Mortgage, LLC	Custodial
3210	1614888814	JPMORGAN CHASE BANK, N.A.	3rd First National Plaza Chicago, IL 60602	William Sholten 312-732-4600 william.sholten@jpmorgan.com	GMAC Mortgage, LLC	Custodial
3211	1614888822	JPMORGAN CHASE BANK, N.A.	3rd First National Plaza Chicago, IL 60602	William Sholten 312-732-4600 william.sholten@jpmorgan.com	GMAC Mortgage, LLC	Custodial
3212	1614888848	JPMORGAN CHASE BANK, N.A.	3rd First National Plaza Chicago, IL 60602	William Sholten 312-732-4600 william.sholten@jpmorgan.com	GMAC Mortgage, LLC	Custodial
3213	1614888855	JPMORGAN CHASE BANK, N.A.	3rd First National Plaza Chicago, IL 60602	William Sholten 312-732-4600 william.sholten@jpmorgan.com	GMAC Mortgage, LLC	Custodial
3214	1614888863	JPMORGAN CHASE BANK, N.A.	3rd First National Plaza Chicago, IL 60602	William Sholten 312-732-4600 william.sholten@jpmorgan.com	GMAC Mortgage, LLC	Custodial
3215	1614888871	JPMORGAN CHASE BANK, N.A.	3rd First National Plaza Chicago, IL 60602	William Sholten 312-732-4600 william.sholten@jpmorgan.com	GMAC Mortgage, LLC	Custodial
3216	1614888889	JPMORGAN CHASE BANK, N.A.	3rd First National Plaza Chicago, IL 60602	William Sholten 312-732-4600 william.sholten@jpmorgan.com	GMAC Mortgage, LLC	Custodial
3217	1614888897	JPMORGAN CHASE BANK, N.A.	3rd First National Plaza Chicago, IL 60602	William Sholten 312-732-4600 william.sholten@jpmorgan.com	GMAC Mortgage, LLC	Custodial
3218	1614888905	JPMORGAN CHASE BANK, N.A.	3rd First National Plaza Chicago, IL 60602	William Sholten 312-732-4600 william.sholten@jpmorgan.com	GMAC Mortgage, LLC	Custodial
3219	1614888947	JPMORGAN CHASE BANK, N.A.	3rd First National Plaza Chicago, IL 60602	William Sholten 312-732-4600 william.sholten@jpmorgan.com	GMAC Mortgage, LLC	Custodial
3220	1614888962	JPMORGAN CHASE BANK, N.A.	3rd First National Plaza Chicago, IL 60602	William Sholten 312-732-4600 william.sholten@jpmorgan.com	GMAC Mortgage, LLC	Custodial
3221	1614889002	JPMORGAN CHASE BANK, N.A.	3rd First National Plaza Chicago, IL 60602	William Sholten 312-732-4600 william.sholten@jpmorgan.com	GMAC Mortgage, LLC	Custodial
3222	1614889036	JPMORGAN CHASE BANK, N.A.	3rd First National Plaza Chicago, IL 60602	William Sholten 312-732-4600 william.sholten@jpmorgan.com	GMAC Mortgage, LLC	Custodial
3223	1614889051	JPMORGAN CHASE BANK, N.A.	3rd First National Plaza Chicago, IL 60602	William Sholten 312-732-4600 william.sholten@jpmorgan.com	GMAC Mortgage, LLC	Custodial
3224	1614889069	JPMORGAN CHASE BANK, N.A.	3rd First National Plaza Chicago, IL 60602	William Sholten 312-732-4600 william.sholten@jpmorgan.com	GMAC Mortgage, LLC	Custodial
3225	1614889127	JPMORGAN CHASE BANK, N.A.	3rd First National Plaza Chicago, IL 60602	William Sholten 312-732-4600 william.sholten@jpmorgan.com	GMAC Mortgage, LLC	Custodial

Privileged and Confidential

Exhibit B - Bank Accounts

Ref #	Account Number	Bank	Address	Contact	Corporate/Company Code	Account Type
3226	1614889143	JPMORGAN CHASE BANK, N.A.	3rd First National Plaza Chicago, IL 60602	William Sholten 312-732-4600 william.sholten@jpmorgan.com	GMAC Mortgage, LLC	Custodial
3227	1614889150	JPMORGAN CHASE BANK, N.A.	3rd First National Plaza Chicago, IL 60602	William Sholten 312-732-4600 william.sholten@jpmorgan.com	GMAC Mortgage, LLC	Custodial
3228	1614889176	JPMORGAN CHASE BANK, N.A.	3rd First National Plaza Chicago, IL 60602	William Sholten 312-732-4600 william.sholten@jpmorgan.com	GMAC Mortgage, LLC	Custodial
3229	1614889192	JPMORGAN CHASE BANK, N.A.	3rd First National Plaza Chicago, IL 60602	William Sholten 312-732-4600 william.sholten@jpmorgan.com	GMAC Mortgage, LLC	Custodial
3230	1614889200	JPMORGAN CHASE BANK, N.A.	3rd First National Plaza Chicago, IL 60602	William Sholten 312-732-4600 william.sholten@jpmorgan.com	GMAC Mortgage, LLC	Custodial
3231	1614889218	JPMORGAN CHASE BANK, N.A.	3rd First National Plaza Chicago, IL 60602	William Sholten 312-732-4600 william.sholten@jpmorgan.com	GMAC Mortgage, LLC	Custodial
3232	1614889234	JPMORGAN CHASE BANK, N.A.	3rd First National Plaza Chicago, IL 60602	William Sholten 312-732-4600 william.sholten@jpmorgan.com	GMAC Mortgage, LLC	Custodial
3233	1614889275	JPMORGAN CHASE BANK, N.A.	3rd First National Plaza Chicago, IL 60602	William Sholten 312-732-4600 william.sholten@jpmorgan.com	GMAC Mortgage, LLC	Custodial
3234	1614889291	JPMORGAN CHASE BANK, N.A.	3rd First National Plaza Chicago, IL 60602	William Sholten 312-732-4600 william.sholten@jpmorgan.com	GMAC Mortgage, LLC	Custodial
3235	1614889309	JPMORGAN CHASE BANK, N.A.	3rd First National Plaza Chicago, IL 60602	William Sholten 312-732-4600 william.sholten@jpmorgan.com	GMAC Mortgage, LLC	Custodial
3236	1614889317	JPMORGAN CHASE BANK, N.A.	3rd First National Plaza Chicago, IL 60602	William Sholten 312-732-4600 william.sholten@jpmorgan.com	GMAC Mortgage, LLC	Custodial
3237	1614889408	JPMORGAN CHASE BANK, N.A.	3rd First National Plaza Chicago, IL 60602	William Sholten 312-732-4600 william.sholten@jpmorgan.com	GMAC Mortgage, LLC	Custodial
3238	1614889416	JPMORGAN CHASE BANK, N.A.	3rd First National Plaza Chicago, IL 60602	William Sholten 312-732-4600 william.sholten@jpmorgan.com	GMAC Mortgage, LLC	Custodial
3239	1614889440	JPMORGAN CHASE BANK, N.A.	3rd First National Plaza Chicago, IL 60602	William Sholten 312-732-4600 william.sholten@jpmorgan.com	GMAC Mortgage, LLC	Custodial
3240	1614889457	JPMORGAN CHASE BANK, N.A.	3rd First National Plaza Chicago, IL 60602	William Sholten 312-732-4600 william.sholten@jpmorgan.com	GMAC Mortgage, LLC	Custodial
3241	1614889465	JPMORGAN CHASE BANK, N.A.	3rd First National Plaza Chicago, IL 60602	William Sholten 312-732-4600 william.sholten@jpmorgan.com	GMAC Mortgage, LLC	Custodial
3242	1614889499	JPMORGAN CHASE BANK, N.A.	3rd First National Plaza Chicago, IL 60602	William Sholten 312-732-4600 william.sholten@jpmorgan.com	GMAC Mortgage, LLC	Custodial
3243	1614889507	JPMORGAN CHASE BANK, N.A.	3rd First National Plaza Chicago, IL 60602	William Sholten 312-732-4600 william.sholten@jpmorgan.com	GMAC Mortgage, LLC	Custodial
3244	1614889523	JPMORGAN CHASE BANK, N.A.	3rd First National Plaza Chicago, IL 60602	William Sholten 312-732-4600 william.sholten@jpmorgan.com	GMAC Mortgage, LLC	Custodial
3245	1614889531	JPMORGAN CHASE BANK, N.A.	3rd First National Plaza Chicago, IL 60602	William Sholten 312-732-4600 william.sholten@jpmorgan.com	GMAC Mortgage, LLC	Custodial
3246	1614889556	JPMORGAN CHASE BANK, N.A.	3rd First National Plaza Chicago, IL 60602	William Sholten 312-732-4600 william.sholten@jpmorgan.com	GMAC Mortgage, LLC	Custodial
3247	1614889598	JPMORGAN CHASE BANK, N.A.	3rd First National Plaza Chicago, IL 60602	William Sholten 312-732-4600 william.sholten@jpmorgan.com	GMAC Mortgage, LLC	Custodial
3248	1614889606	JPMORGAN CHASE BANK, N.A.	3rd First National Plaza Chicago, IL 60602	William Sholten 312-732-4600 william.sholten@jpmorgan.com	GMAC Mortgage, LLC	Custodial
3249	1614889630	JPMORGAN CHASE BANK, N.A.	3rd First National Plaza Chicago, IL 60602	William Sholten 312-732-4600 william.sholten@jpmorgan.com	GMAC Mortgage, LLC	Custodial
3250	1614889671	JPMORGAN CHASE BANK, N.A.	3rd First National Plaza Chicago, IL 60602	William Sholten 312-732-4600 william.sholten@jpmorgan.com	GMAC Mortgage, LLC	Custodial
3251	1614889697	JPMORGAN CHASE BANK, N.A.	3rd First National Plaza Chicago, IL 60602	William Sholten 312-732-4600 william.sholten@jpmorgan.com	GMAC Mortgage, LLC	Custodial
3252	1614889713	JPMORGAN CHASE BANK, N.A.	3rd First National Plaza Chicago, IL 60602	William Sholten 312-732-4600 william.sholten@jpmorgan.com	GMAC Mortgage, LLC	Custodial
3253	1614889721	JPMORGAN CHASE BANK, N.A.	3rd First National Plaza Chicago, IL 60602	William Sholten 312-732-4600 william.sholten@jpmorgan.com	GMAC Mortgage, LLC	Custodial
3254	1614889747	JPMORGAN CHASE BANK, N.A.	3rd First National Plaza Chicago, IL 60602	William Sholten 312-732-4600 william.sholten@jpmorgan.com	GMAC Mortgage, LLC	Custodial
3255	1614889762	JPMORGAN CHASE BANK, N.A.	3rd First National Plaza Chicago, IL 60602	William Sholten 312-732-4600 william.sholten@jpmorgan.com	GMAC Mortgage, LLC	Custodial
3256	1614889804	JPMORGAN CHASE BANK, N.A.	3rd First National Plaza Chicago, IL 60602	William Sholten 312-732-4600 william.sholten@jpmorgan.com	GMAC Mortgage, LLC	Custodial
3257	1614889812	JPMORGAN CHASE BANK, N.A.	3rd First National Plaza Chicago, IL 60602	William Sholten 312-732-4600 william.sholten@jpmorgan.com	GMAC Mortgage, LLC	Custodial
3258	1614889846	JPMORGAN CHASE BANK, N.A.	3rd First National Plaza Chicago, IL 60602	William Sholten 312-732-4600 william.sholten@jpmorgan.com	GMAC Mortgage, LLC	Custodial
3259	1614889879	JPMORGAN CHASE BANK, N.A.	3rd First National Plaza Chicago, IL 60602	William Sholten 312-732-4600 william.sholten@jpmorgan.com	GMAC Mortgage, LLC	Custodial
3260	1614889945	JPMORGAN CHASE BANK, N.A.	3rd First National Plaza Chicago, IL 60602	William Sholten 312-732-4600 william.sholten@jpmorgan.com	GMAC Mortgage, LLC	Custodial
3261	1614889952	JPMORGAN CHASE BANK, N.A.	3rd First National Plaza Chicago, IL 60602	William Sholten 312-732-4600 william.sholten@jpmorgan.com	GMAC Mortgage, LLC	Custodial
3262	1614889994	JPMORGAN CHASE BANK, N.A.	3rd First National Plaza Chicago, IL 60602	William Sholten 312-732-4600 william.sholten@jpmorgan.com	GMAC Mortgage, LLC	Custodial
3263	1614890042	JPMORGAN CHASE BANK, N.A.	3rd First National Plaza Chicago, IL 60602	William Sholten 312-732-4600 william.sholten@jpmorgan.com	GMAC Mortgage, LLC	Custodial
3264	1614890075	JPMORGAN CHASE BANK, N.A.	3rd First National Plaza Chicago, IL 60602	William Sholten 312-732-4600 william.sholten@jpmorgan.com	GMAC Mortgage, LLC	Custodial
3265	1614890141	JPMORGAN CHASE BANK, N.A.	3rd First National Plaza Chicago, IL 60602	William Sholten 312-732-4600 william.sholten@jpmorgan.com	GMAC Mortgage, LLC	Custodial
3266	1614890158	JPMORGAN CHASE BANK, N.A.	3rd First National Plaza Chicago, IL 60602	William Sholten 312-732-4600 william.sholten@jpmorgan.com	GMAC Mortgage, LLC	Custodial
3267	1614890166	JPMORGAN CHASE BANK, N.A.	3rd First National Plaza Chicago, IL 60602	William Sholten 312-732-4600 william.sholten@jpmorgan.com	GMAC Mortgage, LLC	Custodial
3268	1614890174	JPMORGAN CHASE BANK, N.A.	3rd First National Plaza Chicago, IL 60602	William Sholten 312-732-4600 william.sholten@jpmorgan.com	GMAC Mortgage, LLC	Custodial

Privileged and Confidential

Exhibit B - Bank Accounts

Ref #	Account Number	Bank	Address	Contact	Corporate/Company Code	Account Type
3269	1614890182	JPMORGAN CHASE BANK, N.A.	3rd First National Plaza Chicago, IL 60602	William Sholten 312-732-4600 william.sholten@jpmorgan.com	GMAC Mortgage, LLC	Custodial
3270	1614890190	JPMORGAN CHASE BANK, N.A.	3rd First National Plaza Chicago, IL 60602	William Sholten 312-732-4600 william.sholten@jpmorgan.com	GMAC Mortgage, LLC	Custodial
3271	1614890208	JPMORGAN CHASE BANK, N.A.	3rd First National Plaza Chicago, IL 60602	William Sholten 312-732-4600 william.sholten@jpmorgan.com	GMAC Mortgage, LLC	Custodial
3272	1614890224	JPMORGAN CHASE BANK, N.A.	3rd First National Plaza Chicago, IL 60602	William Sholten 312-732-4600 william.sholten@jpmorgan.com	GMAC Mortgage, LLC	Custodial
3273	1614890232	JPMORGAN CHASE BANK, N.A.	3rd First National Plaza Chicago, IL 60602	William Sholten 312-732-4600 william.sholten@jpmorgan.com	GMAC Mortgage, LLC	Custodial
3274	1614890257	JPMORGAN CHASE BANK, N.A.	3rd First National Plaza Chicago, IL 60602	William Sholten 312-732-4600 william.sholten@jpmorgan.com	GMAC Mortgage, LLC	Custodial
3275	1614890265	JPMORGAN CHASE BANK, N.A.	3rd First National Plaza Chicago, IL 60602	William Sholten 312-732-4600 william.sholten@jpmorgan.com	GMAC Mortgage, LLC	Custodial
3276	1614890281	JPMORGAN CHASE BANK, N.A.	3rd First National Plaza Chicago, IL 60602	William Sholten 312-732-4600 william.sholten@jpmorgan.com	GMAC Mortgage, LLC	Custodial
3277	1614890299	JPMORGAN CHASE BANK, N.A.	3rd First National Plaza Chicago, IL 60602	William Sholten 312-732-4600 william.sholten@jpmorgan.com	GMAC Mortgage, LLC	Custodial
3278	1614890307	JPMORGAN CHASE BANK, N.A.	3rd First National Plaza Chicago, IL 60602	William Sholten 312-732-4600 william.sholten@jpmorgan.com	GMAC Mortgage, LLC	Custodial
3279	1614890323	JPMORGAN CHASE BANK, N.A.	3rd First National Plaza Chicago, IL 60602	William Sholten 312-732-4600 william.sholten@jpmorgan.com	GMAC Mortgage, LLC	Custodial
3280	1614890331	JPMORGAN CHASE BANK, N.A.	3rd First National Plaza Chicago, IL 60602	William Sholten 312-732-4600 william.sholten@jpmorgan.com	GMAC Mortgage, LLC	Custodial
3281	1614890349	JPMORGAN CHASE BANK, N.A.	3rd First National Plaza Chicago, IL 60602	William Sholten 312-732-4600 william.sholten@jpmorgan.com	GMAC Mortgage, LLC	Custodial
3282	1614890356	JPMORGAN CHASE BANK, N.A.	3rd First National Plaza Chicago, IL 60602	William Sholten 312-732-4600 william.sholten@jpmorgan.com	GMAC Mortgage, LLC	Custodial
3283	1614890364	JPMORGAN CHASE BANK, N.A.	3rd First National Plaza Chicago, IL 60602	William Sholten 312-732-4600 william.sholten@jpmorgan.com	GMAC Mortgage, LLC	Custodial
3284	1614890372	JPMORGAN CHASE BANK, N.A.	3rd First National Plaza Chicago, IL 60602	William Sholten 312-732-4600 william.sholten@jpmorgan.com	GMAC Mortgage, LLC	Custodial
3285	1614890422	JPMORGAN CHASE BANK, N.A.	3rd First National Plaza Chicago, IL 60602	William Sholten 312-732-4600 william.sholten@jpmorgan.com	GMAC Mortgage, LLC	Custodial
3286	1614890448	JPMORGAN CHASE BANK, N.A.	3rd First National Plaza Chicago, IL 60602	William Sholten 312-732-4600 william.sholten@jpmorgan.com	GMAC Mortgage, LLC	Custodial
3287	1614890455	JPMORGAN CHASE BANK, N.A.	3rd First National Plaza Chicago, IL 60602	William Sholten 312-732-4600 william.sholten@jpmorgan.com	GMAC Mortgage, LLC	Custodial
3288	1614890463	JPMORGAN CHASE BANK, N.A.	3rd First National Plaza Chicago, IL 60602	William Sholten 312-732-4600 william.sholten@jpmorgan.com	GMAC Mortgage, LLC	Custodial
3289	1614890471	JPMORGAN CHASE BANK, N.A.	3rd First National Plaza Chicago, IL 60602	William Sholten 312-732-4600 william.sholten@jpmorgan.com	GMAC Mortgage, LLC	Custodial
3290	1614890505	JPMORGAN CHASE BANK, N.A.	3rd First National Plaza Chicago, IL 60602	William Sholten 312-732-4600 william.sholten@jpmorgan.com	GMAC Mortgage, LLC	Custodial
3291	1614890547	JPMORGAN CHASE BANK, N.A.	3rd First National Plaza Chicago, IL 60602	William Sholten 312-732-4600 william.sholten@jpmorgan.com	GMAC Mortgage, LLC	Custodial
3292	1614890554	JPMORGAN CHASE BANK, N.A.	3rd First National Plaza Chicago, IL 60602	William Sholten 312-732-4600 william.sholten@jpmorgan.com	GMAC Mortgage, LLC	Custodial
3293	1614890562	JPMORGAN CHASE BANK, N.A.	3rd First National Plaza Chicago, IL 60602	William Sholten 312-732-4600 william.sholten@jpmorgan.com	GMAC Mortgage, LLC	Custodial
3294	1614890588	JPMORGAN CHASE BANK, N.A.	3rd First National Plaza Chicago, IL 60602	William Sholten 312-732-4600 william.sholten@jpmorgan.com	GMAC Mortgage, LLC	Custodial
3295	1614890604	JPMORGAN CHASE BANK, N.A.	3rd First National Plaza Chicago, IL 60602	William Sholten 312-732-4600 william.sholten@jpmorgan.com	GMAC Mortgage, LLC	Custodial
3296	1614890612	JPMORGAN CHASE BANK, N.A.	3rd First National Plaza Chicago, IL 60602	William Sholten 312-732-4600 william.sholten@jpmorgan.com	GMAC Mortgage, LLC	Custodial
3297	1614890620	JPMORGAN CHASE BANK, N.A.	3rd First National Plaza Chicago, IL 60602	William Sholten 312-732-4600 william.sholten@jpmorgan.com	GMAC Mortgage, LLC	Custodial
3298	1614890638	JPMORGAN CHASE BANK, N.A.	3rd First National Plaza Chicago, IL 60602	William Sholten 312-732-4600 william.sholten@jpmorgan.com	GMAC Mortgage, LLC	Custodial
3299	1614890646	JPMORGAN CHASE BANK, N.A.	3rd First National Plaza Chicago, IL 60602	William Sholten 312-732-4600 william.sholten@jpmorgan.com	GMAC Mortgage, LLC	Custodial
3300	1614890653	JPMORGAN CHASE BANK, N.A.	3rd First National Plaza Chicago, IL 60602	William Sholten 312-732-4600 william.sholten@jpmorgan.com	GMAC Mortgage, LLC	Custodial
3301	1614890687	JPMORGAN CHASE BANK, N.A.	3rd First National Plaza Chicago, IL 60602	William Sholten 312-732-4600 william.sholten@jpmorgan.com	GMAC Mortgage, LLC	Custodial
3302	1614890703	JPMORGAN CHASE BANK, N.A.	3rd First National Plaza Chicago, IL 60602	William Sholten 312-732-4600 william.sholten@jpmorgan.com	GMAC Mortgage, LLC	Custodial
3303	1614890729	JPMORGAN CHASE BANK, N.A.	3rd First National Plaza Chicago, IL 60602	William Sholten 312-732-4600 william.sholten@jpmorgan.com	GMAC Mortgage, LLC	Custodial
3304	1614890737	JPMORGAN CHASE BANK, N.A.	3rd First National Plaza Chicago, IL 60602	William Sholten 312-732-4600 william.sholten@jpmorgan.com	GMAC Mortgage, LLC	Custodial
3305	1614890752	JPMORGAN CHASE BANK, N.A.	3rd First National Plaza Chicago, IL 60602	William Sholten 312-732-4600 william.sholten@jpmorgan.com	GMAC Mortgage, LLC	Custodial
3306	1614890760	JPMORGAN CHASE BANK, N.A.	3rd First National Plaza Chicago, IL 60602	William Sholten 312-732-4600 william.sholten@jpmorgan.com	GMAC Mortgage, LLC	Custodial
3307	1614890778	JPMORGAN CHASE BANK, N.A.	3rd First National Plaza Chicago, IL 60602	William Sholten 312-732-4600 william.sholten@jpmorgan.com	GMAC Mortgage, LLC	Custodial
3308	1614890786	JPMORGAN CHASE BANK, N.A.	3rd First National Plaza Chicago, IL 60602	William Sholten 312-732-4600 william.sholten@jpmorgan.com	GMAC Mortgage, LLC	Custodial
3309	1614890802	JPMORGAN CHASE BANK, N.A.	3rd First National Plaza Chicago, IL 60602	William Sholten 312-732-4600 william.sholten@jpmorgan.com	GMAC Mortgage, LLC	Custodial
3310	1614890810	JPMORGAN CHASE BANK, N.A.	3rd First National Plaza Chicago, IL 60602	William Sholten 312-732-4600 william.sholten@jpmorgan.com	GMAC Mortgage, LLC	Custodial
3311	1614890828	JPMORGAN CHASE BANK, N.A.	3rd First National Plaza Chicago, IL 60602	William Sholten 312-732-4600 william.sholten@jpmorgan.com	GMAC Mortgage, LLC	Custodial

Privileged and Confidential

Exhibit B - Bank Accounts

Ref #	Account Number	Bank	Address	Contact	Corporate/Company Code	Account Type
3312	1614890836	JPMORGAN CHASE BANK, N.A.	3rd First National Plaza Chicago, IL 60602	William Sholten 312-732-4600 william.sholten@jpmorgan.com	GMAC Mortgage, LLC	Custodial
3313	1614890844	JPMORGAN CHASE BANK, N.A.	3rd First National Plaza Chicago, IL 60602	William Sholten 312-732-4600 william.sholten@jpmorgan.com	GMAC Mortgage, LLC	Custodial
3314	1614890869	JPMORGAN CHASE BANK, N.A.	3rd First National Plaza Chicago, IL 60602	William Sholten 312-732-4600 william.sholten@jpmorgan.com	GMAC Mortgage, LLC	Custodial
3315	1614890885	JPMORGAN CHASE BANK, N.A.	3rd First National Plaza Chicago, IL 60602	William Sholten 312-732-4600 william.sholten@jpmorgan.com	GMAC Mortgage, LLC	Custodial
3316	1614890893	JPMORGAN CHASE BANK, N.A.	3rd First National Plaza Chicago, IL 60602	William Sholten 312-732-4600 william.sholten@jpmorgan.com	GMAC Mortgage, LLC	Custodial
3317	1614890901	JPMORGAN CHASE BANK, N.A.	3rd First National Plaza Chicago, IL 60602	William Sholten 312-732-4600 william.sholten@jpmorgan.com	GMAC Mortgage, LLC	Custodial
3318	1614890919	JPMORGAN CHASE BANK, N.A.	3rd First National Plaza Chicago, IL 60602	William Sholten 312-732-4600 william.sholten@jpmorgan.com	GMAC Mortgage, LLC	Custodial
3319	1614890935	JPMORGAN CHASE BANK, N.A.	3rd First National Plaza Chicago, IL 60602	William Sholten 312-732-4600 william.sholten@jpmorgan.com	GMAC Mortgage, LLC	Custodial
3320	1614890968	JPMORGAN CHASE BANK, N.A.	3rd First National Plaza Chicago, IL 60602	William Sholten 312-732-4600 william.sholten@jpmorgan.com	GMAC Mortgage, LLC	Custodial
3321	1614890976	JPMORGAN CHASE BANK, N.A.	3rd First National Plaza Chicago, IL 60602	William Sholten 312-732-4600 william.sholten@jpmorgan.com	GMAC Mortgage, LLC	Custodial
3322	1614890984	JPMORGAN CHASE BANK, N.A.	3rd First National Plaza Chicago, IL 60602	William Sholten 312-732-4600 william.sholten@jpmorgan.com	GMAC Mortgage, LLC	Custodial
3323	1614891008	JPMORGAN CHASE BANK, N.A.	3rd First National Plaza Chicago, IL 60602	William Sholten 312-732-4600 william.sholten@jpmorgan.com	GMAC Mortgage, LLC	Custodial
3324	1614891016	JPMORGAN CHASE BANK, N.A.	3rd First National Plaza Chicago, IL 60602	William Sholten 312-732-4600 william.sholten@jpmorgan.com	GMAC Mortgage, LLC	Custodial
3325	1614891040	JPMORGAN CHASE BANK, N.A.	3rd First National Plaza Chicago, IL 60602	William Sholten 312-732-4600 william.sholten@jpmorgan.com	GMAC Mortgage, LLC	Custodial
3326	1614891065	JPMORGAN CHASE BANK, N.A.	3rd First National Plaza Chicago, IL 60602	William Sholten 312-732-4600 william.sholten@jpmorgan.com	GMAC Mortgage, LLC	Custodial
3327	1614891073	JPMORGAN CHASE BANK, N.A.	3rd First National Plaza Chicago, IL 60602	William Sholten 312-732-4600 william.sholten@jpmorgan.com	GMAC Mortgage, LLC	Custodial
3328	1614891081	JPMORGAN CHASE BANK, N.A.	3rd First National Plaza Chicago, IL 60602	William Sholten 312-732-4600 william.sholten@jpmorgan.com	GMAC Mortgage, LLC	Custodial
3329	1614891099	JPMORGAN CHASE BANK, N.A.	3rd First National Plaza Chicago, IL 60602	William Sholten 312-732-4600 william.sholten@jpmorgan.com	GMAC Mortgage, LLC	Custodial
3330	1614891107	JPMORGAN CHASE BANK, N.A.	3rd First National Plaza Chicago, IL 60602	William Sholten 312-732-4600 william.sholten@jpmorgan.com	GMAC Mortgage, LLC	Custodial
3331	1614891123	JPMORGAN CHASE BANK, N.A.	3rd First National Plaza Chicago, IL 60602	William Sholten 312-732-4600 william.sholten@jpmorgan.com	GMAC Mortgage, LLC	Custodial
3332	1614891131	JPMORGAN CHASE BANK, N.A.	3rd First National Plaza Chicago, IL 60602	William Sholten 312-732-4600 william.sholten@jpmorgan.com	GMAC Mortgage, LLC	Custodial
3333	1614891156	JPMORGAN CHASE BANK, N.A.	3rd First National Plaza Chicago, IL 60602	William Sholten 312-732-4600 william.sholten@jpmorgan.com	GMAC Mortgage, LLC	Custodial
3334	1614891164	JPMORGAN CHASE BANK, N.A.	3rd First National Plaza Chicago, IL 60602	William Sholten 312-732-4600 william.sholten@jpmorgan.com	GMAC Mortgage, LLC	Custodial
3335	1614891172	JPMORGAN CHASE BANK, N.A.	3rd First National Plaza Chicago, IL 60602	William Sholten 312-732-4600 william.sholten@jpmorgan.com	GMAC Mortgage, LLC	Custodial
3336	1614891180	JPMORGAN CHASE BANK, N.A.	3rd First National Plaza Chicago, IL 60602	William Sholten 312-732-4600 william.sholten@jpmorgan.com	GMAC Mortgage, LLC	Custodial
3337	1614891198	JPMORGAN CHASE BANK, N.A.	3rd First National Plaza Chicago, IL 60602	William Sholten 312-732-4600 william.sholten@jpmorgan.com	GMAC Mortgage, LLC	Custodial
3338	1614891214	JPMORGAN CHASE BANK, N.A.	3rd First National Plaza Chicago, IL 60602	William Sholten 312-732-4600 william.sholten@jpmorgan.com	GMAC Mortgage, LLC	Custodial
3339	1614891222	JPMORGAN CHASE BANK, N.A.	3rd First National Plaza Chicago, IL 60602	William Sholten 312-732-4600 william.sholten@jpmorgan.com	GMAC Mortgage, LLC	Custodial
3340	1614891230	JPMORGAN CHASE BANK, N.A.	3rd First National Plaza Chicago, IL 60602	William Sholten 312-732-4600 william.sholten@jpmorgan.com	GMAC Mortgage, LLC	Custodial
3341	1614891248	JPMORGAN CHASE BANK, N.A.	3rd First National Plaza Chicago, IL 60602	William Sholten 312-732-4600 william.sholten@jpmorgan.com	GMAC Mortgage, LLC	Custodial
3342	1614891255	JPMORGAN CHASE BANK, N.A.	3rd First National Plaza Chicago, IL 60602	William Sholten 312-732-4600 william.sholten@jpmorgan.com	GMAC Mortgage, LLC	Custodial
3343	1614891263	JPMORGAN CHASE BANK, N.A.	3rd First National Plaza Chicago, IL 60602	William Sholten 312-732-4600 william.sholten@jpmorgan.com	GMAC Mortgage, LLC	Custodial
3344	1614891271	JPMORGAN CHASE BANK, N.A.	3rd First National Plaza Chicago, IL 60602	William Sholten 312-732-4600 william.sholten@jpmorgan.com	GMAC Mortgage, LLC	Custodial
3345	1614891305	JPMORGAN CHASE BANK, N.A.	3rd First National Plaza Chicago, IL 60602	William Sholten 312-732-4600 william.sholten@jpmorgan.com	GMAC Mortgage, LLC	Custodial
3346	1614891321	JPMORGAN CHASE BANK, N.A.	3rd First National Plaza Chicago, IL 60602	William Sholten 312-732-4600 william.sholten@jpmorgan.com	GMAC Mortgage, LLC	Custodial
3347	1614891339	JPMORGAN CHASE BANK, N.A.	3rd First National Plaza Chicago, IL 60602	William Sholten 312-732-4600 william.sholten@jpmorgan.com	GMAC Mortgage, LLC	Custodial
3348	1614891362	JPMORGAN CHASE BANK, N.A.	3rd First National Plaza Chicago, IL 60602	William Sholten 312-732-4600 william.sholten@jpmorgan.com	GMAC Mortgage, LLC	Custodial
3349	1614891388	JPMORGAN CHASE BANK, N.A.	3rd First National Plaza Chicago, IL 60602	William Sholten 312-732-4600 william.sholten@jpmorgan.com	GMAC Mortgage, LLC	Custodial
3350	1614891396	JPMORGAN CHASE BANK, N.A.	3rd First National Plaza Chicago, IL 60602	William Sholten 312-732-4600 william.sholten@jpmorgan.com	GMAC Mortgage, LLC	Custodial
3351	1614891412	JPMORGAN CHASE BANK, N.A.	3rd First National Plaza Chicago, IL 60602	William Sholten 312-732-4600 william.sholten@jpmorgan.com	GMAC Mortgage, LLC	Custodial
3352	1614891420	JPMORGAN CHASE BANK, N.A.	3rd First National Plaza Chicago, IL 60602	William Sholten 312-732-4600 william.sholten@jpmorgan.com	GMAC Mortgage, LLC	Custodial
3353	1614891446	JPMORGAN CHASE BANK, N.A.	3rd First National Plaza Chicago, IL 60602	William Sholten 312-732-4600 william.sholten@jpmorgan.com	GMAC Mortgage, LLC	Custodial
3354	1614891453	JPMORGAN CHASE BANK, N.A.	3rd First National Plaza Chicago, IL 60602	William Sholten 312-732-4600 william.sholten@jpmorgan.com	GMAC Mortgage, LLC	Custodial

Privileged and Confidential

Exhibit B - Bank Accounts

Ref #	Account Number	Bank	Address	Contact	Corporate/Company Code	Account Type
3355	1614891461	JPMORGAN CHASE BANK, N.A.	3rd First National Plaza Chicago, IL 60602	William Sholten 312-732-4600 william.sholten@jpmorgan.com	GMAC Mortgage, LLC	Custodial
3356	1614891479	JPMORGAN CHASE BANK, N.A.	3rd First National Plaza Chicago, IL 60602	William Sholten 312-732-4600 william.sholten@jpmorgan.com	GMAC Mortgage, LLC	Custodial
3357	2331798732	JPMORGAN CHASE BANK, N.A.	3rd First National Plaza Chicago, IL 60602	William Sholten 312-732-4600 william.sholten@jpmorgan.com	GMAC Mortgage, LLC	Custodial
3358	2331798773	JPMORGAN CHASE BANK, N.A.	3rd First National Plaza Chicago, IL 60602	William Sholten 312-732-4600 william.sholten@jpmorgan.com	GMAC Mortgage, LLC	Custodial
3359	2331798799	JPMORGAN CHASE BANK, N.A.	3rd First National Plaza Chicago, IL 60602	William Sholten 312-732-4600 william.sholten@jpmorgan.com	GMAC Mortgage, LLC	Custodial
3360	2331798831	JPMORGAN CHASE BANK, N.A.	3rd First National Plaza Chicago, IL 60602	William Sholten 312-732-4600 william.sholten@jpmorgan.com	GMAC Mortgage, LLC	Custodial
3361	2331798856	JPMORGAN CHASE BANK, N.A.	3rd First National Plaza Chicago, IL 60602	William Sholten 312-732-4600 william.sholten@jpmorgan.com	GMAC Mortgage, LLC	Custodial
3362	2331798864	JPMORGAN CHASE BANK, N.A.	3rd First National Plaza Chicago, IL 60602	William Sholten 312-732-4600 william.sholten@jpmorgan.com	GMAC Mortgage, LLC	Custodial
3363	2331798872	JPMORGAN CHASE BANK, N.A.	3rd First National Plaza Chicago, IL 60602	William Sholten 312-732-4600 william.sholten@jpmorgan.com	GMAC Mortgage, LLC	Custodial
3364	2331798898	JPMORGAN CHASE BANK, N.A.	3rd First National Plaza Chicago, IL 60602	William Sholten 312-732-4600 william.sholten@jpmorgan.com	GMAC Mortgage, LLC	Custodial
3365	2331798914	JPMORGAN CHASE BANK, N.A.	3rd First National Plaza Chicago, IL 60602	William Sholten 312-732-4600 william.sholten@jpmorgan.com	GMAC Mortgage, LLC	Custodial
3366	2331798922	JPMORGAN CHASE BANK, N.A.	3rd First National Plaza Chicago, IL 60602	William Sholten 312-732-4600 william.sholten@jpmorgan.com	GMAC Mortgage, LLC	Custodial
3367	2331798948	JPMORGAN CHASE BANK, N.A.	3rd First National Plaza Chicago, IL 60602	William Sholten 312-732-4600 william.sholten@jpmorgan.com	GMAC Mortgage, LLC	Custodial
3368	2331798955	JPMORGAN CHASE BANK, N.A.	3rd First National Plaza Chicago, IL 60602	William Sholten 312-732-4600 william.sholten@jpmorgan.com	GMAC Mortgage, LLC	Custodial
3369	2331798971	JPMORGAN CHASE BANK, N.A.	3rd First National Plaza Chicago, IL 60602	William Sholten 312-732-4600 william.sholten@jpmorgan.com	GMAC Mortgage, LLC	Custodial
3370	2331799037	JPMORGAN CHASE BANK, N.A.	3rd First National Plaza Chicago, IL 60602	William Sholten 312-732-4600 william.sholten@jpmorgan.com	GMAC Mortgage, LLC	Custodial
3371	2331799052	JPMORGAN CHASE BANK, N.A.	3rd First National Plaza Chicago, IL 60602	William Sholten 312-732-4600 william.sholten@jpmorgan.com	GMAC Mortgage, LLC	Custodial
3372	2331799060	JPMORGAN CHASE BANK, N.A.	3rd First National Plaza Chicago, IL 60602	William Sholten 312-732-4600 william.sholten@jpmorgan.com	GMAC Mortgage, LLC	Custodial
3373	2331799151	JPMORGAN CHASE BANK, N.A.	3rd First National Plaza Chicago, IL 60602	William Sholten 312-732-4600 william.sholten@jpmorgan.com	GMAC Mortgage, LLC	Custodial
3374	2331799185	JPMORGAN CHASE BANK, N.A.	3rd First National Plaza Chicago, IL 60602	William Sholten 312-732-4600 william.sholten@jpmorgan.com	GMAC Mortgage, LLC	Custodial
3375	2331799193	JPMORGAN CHASE BANK, N.A.	3rd First National Plaza Chicago, IL 60602	William Sholten 312-732-4600 william.sholten@jpmorgan.com	GMAC Mortgage, LLC	Custodial
3376	2331799250	JPMORGAN CHASE BANK, N.A.	3rd First National Plaza Chicago, IL 60602	William Sholten 312-732-4600 william.sholten@jpmorgan.com	GMAC Mortgage, LLC	Custodial
3377	2331799268	JPMORGAN CHASE BANK, N.A.	3rd First National Plaza Chicago, IL 60602	William Sholten 312-732-4600 william.sholten@jpmorgan.com	GMAC Mortgage, LLC	Custodial
3378	2331799276	JPMORGAN CHASE BANK, N.A.	3rd First National Plaza Chicago, IL 60602	William Sholten 312-732-4600 william.sholten@jpmorgan.com	GMAC Mortgage, LLC	Custodial
3379	2331799284	JPMORGAN CHASE BANK, N.A.	3rd First National Plaza Chicago, IL 60602	William Sholten 312-732-4600 william.sholten@jpmorgan.com	GMAC Mortgage, LLC	Custodial
3380	2331799292	JPMORGAN CHASE BANK, N.A.	3rd First National Plaza Chicago, IL 60602	William Sholten 312-732-4600 william.sholten@jpmorgan.com	GMAC Mortgage, LLC	Custodial
3381	2331799318	JPMORGAN CHASE BANK, N.A.	3rd First National Plaza Chicago, IL 60602	William Sholten 312-732-4600 william.sholten@jpmorgan.com	GMAC Mortgage, LLC	Custodial
3382	2331799326	JPMORGAN CHASE BANK, N.A.	3rd First National Plaza Chicago, IL 60602	William Sholten 312-732-4600 william.sholten@jpmorgan.com	GMAC Mortgage, LLC	Custodial
3383	2331799334	JPMORGAN CHASE BANK, N.A.	3rd First National Plaza Chicago, IL 60602	William Sholten 312-732-4600 william.sholten@jpmorgan.com	GMAC Mortgage, LLC	Custodial
3384	2331799367	JPMORGAN CHASE BANK, N.A.	3rd First National Plaza Chicago, IL 60602	William Sholten 312-732-4600 william.sholten@jpmorgan.com	GMAC Mortgage, LLC	Custodial
3385	2331799375	JPMORGAN CHASE BANK, N.A.	3rd First National Plaza Chicago, IL 60602	William Sholten 312-732-4600 william.sholten@jpmorgan.com	GMAC Mortgage, LLC	Custodial
3386	2331799466	JPMORGAN CHASE BANK, N.A.	3rd First National Plaza Chicago, IL 60602	William Sholten 312-732-4600 william.sholten@jpmorgan.com	GMAC Mortgage, LLC	Custodial
3387	2331799474	JPMORGAN CHASE BANK, N.A.	3rd First National Plaza Chicago, IL 60602	William Sholten 312-732-4600 william.sholten@jpmorgan.com	GMAC Mortgage, LLC	Custodial
3388	2331799573	JPMORGAN CHASE BANK, N.A.	3rd First National Plaza Chicago, IL 60602	William Sholten 312-732-4600 william.sholten@jpmorgan.com	GMAC Mortgage, LLC	Custodial
3389	2331799581	JPMORGAN CHASE BANK, N.A.	3rd First National Plaza Chicago, IL 60602	William Sholten 312-732-4600 william.sholten@jpmorgan.com	GMAC Mortgage, LLC	Custodial
3390	2331799599	JPMORGAN CHASE BANK, N.A.	3rd First National Plaza Chicago, IL 60602	William Sholten 312-732-4600 william.sholten@jpmorgan.com	GMAC Mortgage, LLC	Custodial
3391	2331799615	JPMORGAN CHASE BANK, N.A.	3rd First National Plaza Chicago, IL 60602	William Sholten 312-732-4600 william.sholten@jpmorgan.com	GMAC Mortgage, LLC	Custodial
3392	2331799656	JPMORGAN CHASE BANK, N.A.	3rd First National Plaza Chicago, IL 60602	William Sholten 312-732-4600 william.sholten@jpmorgan.com	GMAC Mortgage, LLC	Custodial
3393	2331799706	JPMORGAN CHASE BANK, N.A.	3rd First National Plaza Chicago, IL 60602	William Sholten 312-732-4600 william.sholten@jpmorgan.com	GMAC Mortgage, LLC	Custodial
3394	2331799714	JPMORGAN CHASE BANK, N.A.	3rd First National Plaza Chicago, IL 60602	William Sholten 312-732-4600 william.sholten@jpmorgan.com	GMAC Mortgage, LLC	Custodial
3395	2331799730	JPMORGAN CHASE BANK, N.A.	3rd First National Plaza Chicago, IL 60602	William Sholten 312-732-4600 william.sholten@jpmorgan.com	GMAC Mortgage, LLC	Custodial
3396	2331799771	JPMORGAN CHASE BANK, N.A.	3rd First National Plaza Chicago, IL 60602	William Sholten 312-732-4600 william.sholten@jpmorgan.com	GMAC Mortgage, LLC	Custodial
3397	2331799805	JPMORGAN CHASE BANK, N.A.	3rd First National Plaza Chicago, IL 60602	William Sholten 312-732-4600 william.sholten@jpmorgan.com	GMAC Mortgage, LLC	Custodial

Privileged and Confidential

Exhibit B - Bank Accounts

Ref #	Account Number	Bank	Address	Contact	Corporate/Company Code	Account Type
3398	2331799839	JPMORGAN CHASE BANK, N.A.	3rd First National Plaza Chicago, IL 60602	William Sholten 312-732-4600 william.sholten@jpmorgan.com	GMAC Mortgage, LLC	Custodial
3399	2331799847	JPMORGAN CHASE BANK, N.A.	3rd First National Plaza Chicago, IL 60602	William Sholten 312-732-4600 william.sholten@jpmorgan.com	GMAC Mortgage, LLC	Custodial
3400	2331799854	JPMORGAN CHASE BANK, N.A.	3rd First National Plaza Chicago, IL 60602	William Sholten 312-732-4600 william.sholten@jpmorgan.com	GMAC Mortgage, LLC	Custodial
3401	2331799862	JPMORGAN CHASE BANK, N.A.	3rd First National Plaza Chicago, IL 60602	William Sholten 312-732-4600 william.sholten@jpmorgan.com	GMAC Mortgage, LLC	Custodial
3402	2331799904	JPMORGAN CHASE BANK, N.A.	3rd First National Plaza Chicago, IL 60602	William Sholten 312-732-4600 william.sholten@jpmorgan.com	GMAC Mortgage, LLC	Custodial
3403	2331799912	JPMORGAN CHASE BANK, N.A.	3rd First National Plaza Chicago, IL 60602	William Sholten 312-732-4600 william.sholten@jpmorgan.com	GMAC Mortgage, LLC	Custodial
3404	2331799938	JPMORGAN CHASE BANK, N.A.	3rd First National Plaza Chicago, IL 60602	William Sholten 312-732-4600 william.sholten@jpmorgan.com	GMAC Mortgage, LLC	Custodial
3405	2331799953	JPMORGAN CHASE BANK, N.A.	3rd First National Plaza Chicago, IL 60602	William Sholten 312-732-4600 william.sholten@jpmorgan.com	GMAC Mortgage, LLC	Custodial
3406	2331800108	JPMORGAN CHASE BANK, N.A.	3rd First National Plaza Chicago, IL 60602	William Sholten 312-732-4600 william.sholten@jpmorgan.com	GMAC Mortgage, LLC	Custodial
3407	2331800116	JPMORGAN CHASE BANK, N.A.	3rd First National Plaza Chicago, IL 60602	William Sholten 312-732-4600 william.sholten@jpmorgan.com	GMAC Mortgage, LLC	Custodial
3408	2331800124	JPMORGAN CHASE BANK, N.A.	3rd First National Plaza Chicago, IL 60602	William Sholten 312-732-4600 william.sholten@jpmorgan.com	GMAC Mortgage, LLC	Custodial
3409	2331800157	JPMORGAN CHASE BANK, N.A.	3rd First National Plaza Chicago, IL 60602	William Sholten 312-732-4600 william.sholten@jpmorgan.com	GMAC Mortgage, LLC	Custodial
3410	2331800199	JPMORGAN CHASE BANK, N.A.	3rd First National Plaza Chicago, IL 60602	William Sholten 312-732-4600 william.sholten@jpmorgan.com	GMAC Mortgage, LLC	Custodial
3411	2331800413	JPMORGAN CHASE BANK, N.A.	3rd First National Plaza Chicago, IL 60602	William Sholten 312-732-4600 william.sholten@jpmorgan.com	GMAC Mortgage, LLC	Custodial
3412	2331800421	JPMORGAN CHASE BANK, N.A.	3rd First National Plaza Chicago, IL 60602	William Sholten 312-732-4600 william.sholten@jpmorgan.com	GMAC Mortgage, LLC	Custodial
3413	2331800470	JPMORGAN CHASE BANK, N.A.	3rd First National Plaza Chicago, IL 60602	William Sholten 312-732-4600 william.sholten@jpmorgan.com	GMAC Mortgage, LLC	Custodial
3414	2331800488	JPMORGAN CHASE BANK, N.A.	3rd First National Plaza Chicago, IL 60602	William Sholten 312-732-4600 william.sholten@jpmorgan.com	GMAC Mortgage, LLC	Custodial
3415	2331800496	JPMORGAN CHASE BANK, N.A.	3rd First National Plaza Chicago, IL 60602	William Sholten 312-732-4600 william.sholten@jpmorgan.com	GMAC Mortgage, LLC	Custodial
3416	2331800587	JPMORGAN CHASE BANK, N.A.	3rd First National Plaza Chicago, IL 60602	William Sholten 312-732-4600 william.sholten@jpmorgan.com	GMAC Mortgage, LLC	Custodial
3417	2331800686	JPMORGAN CHASE BANK, N.A.	3rd First National Plaza Chicago, IL 60602	William Sholten 312-732-4600 william.sholten@jpmorgan.com	GMAC Mortgage, LLC	Custodial
3418	2331800702	JPMORGAN CHASE BANK, N.A.	3rd First National Plaza Chicago, IL 60602	William Sholten 312-732-4600 william.sholten@jpmorgan.com	GMAC Mortgage, LLC	Custodial
3419	2331800710	JPMORGAN CHASE BANK, N.A.	3rd First National Plaza Chicago, IL 60602	William Sholten 312-732-4600 william.sholten@jpmorgan.com	GMAC Mortgage, LLC	Custodial
3420	2331800728	JPMORGAN CHASE BANK, N.A.	3rd First National Plaza Chicago, IL 60602	William Sholten 312-732-4600 william.sholten@jpmorgan.com	GMAC Mortgage, LLC	Custodial
3421	2331800736	JPMORGAN CHASE BANK, N.A.	3rd First National Plaza Chicago, IL 60602	William Sholten 312-732-4600 william.sholten@jpmorgan.com	GMAC Mortgage, LLC	Custodial
3422	2331800751	JPMORGAN CHASE BANK, N.A.	3rd First National Plaza Chicago, IL 60602	William Sholten 312-732-4600 william.sholten@jpmorgan.com	GMAC Mortgage, LLC	Custodial
3423	2331800769	JPMORGAN CHASE BANK, N.A.	3rd First National Plaza Chicago, IL 60602	William Sholten 312-732-4600 william.sholten@jpmorgan.com	GMAC Mortgage, LLC	Custodial
3424	2331800777	JPMORGAN CHASE BANK, N.A.	3rd First National Plaza Chicago, IL 60602	William Sholten 312-732-4600 william.sholten@jpmorgan.com	GMAC Mortgage, LLC	Custodial
3425	2331800793	JPMORGAN CHASE BANK, N.A.	3rd First National Plaza Chicago, IL 60602	William Sholten 312-732-4600 william.sholten@jpmorgan.com	GMAC Mortgage, LLC	Custodial
3426	2331800827	JPMORGAN CHASE BANK, N.A.	3rd First National Plaza Chicago, IL 60602	William Sholten 312-732-4600 william.sholten@jpmorgan.com	GMAC Mortgage, LLC	Custodial
3427	2331800959	JPMORGAN CHASE BANK, N.A.	3rd First National Plaza Chicago, IL 60602	William Sholten 312-732-4600 william.sholten@jpmorgan.com	GMAC Mortgage, LLC	Custodial
3428	2331800967	JPMORGAN CHASE BANK, N.A.	3rd First National Plaza Chicago, IL 60602	William Sholten 312-732-4600 william.sholten@jpmorgan.com	GMAC Mortgage, LLC	Custodial
3429	2331800975	JPMORGAN CHASE BANK, N.A.	3rd First National Plaza Chicago, IL 60602	William Sholten 312-732-4600 william.sholten@jpmorgan.com	GMAC Mortgage, LLC	Custodial
3430	2331800983	JPMORGAN CHASE BANK, N.A.	3rd First National Plaza Chicago, IL 60602	William Sholten 312-732-4600 william.sholten@jpmorgan.com	GMAC Mortgage, LLC	Custodial
3431	2331800991	JPMORGAN CHASE BANK, N.A.	3rd First National Plaza Chicago, IL 60602	William Sholten 312-732-4600 william.sholten@jpmorgan.com	GMAC Mortgage, LLC	Custodial
3432	2331801023	JPMORGAN CHASE BANK, N.A.	3rd First National Plaza Chicago, IL 60602	William Sholten 312-732-4600 william.sholten@jpmorgan.com	GMAC Mortgage, LLC	Custodial
3433	2331801056	JPMORGAN CHASE BANK, N.A.	3rd First National Plaza Chicago, IL 60602	William Sholten 312-732-4600 william.sholten@jpmorgan.com	GMAC Mortgage, LLC	Custodial
3434	2331801064	JPMORGAN CHASE BANK, N.A.	3rd First National Plaza Chicago, IL 60602	William Sholten 312-732-4600 william.sholten@jpmorgan.com	GMAC Mortgage, LLC	Custodial
3435	2331801072	JPMORGAN CHASE BANK, N.A.	3rd First National Plaza Chicago, IL 60602	William Sholten 312-732-4600 william.sholten@jpmorgan.com	GMAC Mortgage, LLC	Custodial
3436	2331801080	JPMORGAN CHASE BANK, N.A.	3rd First National Plaza Chicago, IL 60602	William Sholten 312-732-4600 william.sholten@jpmorgan.com	GMAC Mortgage, LLC	Custodial
3437	2331801114	JPMORGAN CHASE BANK, N.A.	3rd First National Plaza Chicago, IL 60602	William Sholten 312-732-4600 william.sholten@jpmorgan.com	GMAC Mortgage, LLC	Custodial
3438	2331801122	JPMORGAN CHASE BANK, N.A.	3rd First National Plaza Chicago, IL 60602	William Sholten 312-732-4600 william.sholten@jpmorgan.com	GMAC Mortgage, LLC	Custodial
3439	2331801270	JPMORGAN CHASE BANK, N.A.	3rd First National Plaza Chicago, IL 60602	William Sholten 312-732-4600 william.sholten@jpmorgan.com	GMAC Mortgage, LLC	Custodial
3440	2331801288	JPMORGAN CHASE BANK, N.A.	3rd First National Plaza Chicago, IL 60602	William Sholten 312-732-4600 william.sholten@jpmorgan.com	GMAC Mortgage, LLC	Custodial

Privileged and Confidential

Exhibit B - Bank Accounts

Ref #	Account Number	Bank	Address	Contact	Corporate/Company Code	Account Type
3441	G08567	JPMORGAN CHASE BANK, N.A.	3rd First National Plaza Chicago, IL 60602	William Sholten 312-732-4600 william.sholten@jpmorgan.com	GMAC Mortgage, LLC	Custodial
3442	G15290	JPMORGAN CHASE BANK, N.A.	3rd First National Plaza Chicago, IL 60602	William Sholten 312-732-4600 william.sholten@jpmorgan.com	GMAC Mortgage, LLC	Custodial
3443	G54823	JPMORGAN CHASE BANK, N.A.	3rd First National Plaza Chicago, IL 60602	William Sholten 312-732-4600 william.sholten@jpmorgan.com	GMAC Mortgage, LLC	Custodial
3444	G55026	JPMORGAN CHASE BANK, N.A.	3rd First National Plaza Chicago, IL 60602	William Sholten 312-732-4600 william.sholten@jpmorgan.com	Residential Funding Company, LLC	Custodial
3445	G56023	JPMORGAN CHASE BANK, N.A.	3rd First National Plaza Chicago, IL 60602	William Sholten 312-732-4600 william.sholten@jpmorgan.com	GMAC Mortgage, LLC	Custodial
3446	P66230	JPMORGAN CHASE BANK, N.A.	3rd First National Plaza Chicago, IL 60602	William Sholten 312-732-4600 william.sholten@jpmorgan.com	Passive Asset Transactions LLC	Custodial
3447	796682961	JPMORGAN CHASE BANK, N.A.	3rd First National Plaza Chicago, IL 60602	William Sholten 312-732-4600 william.sholten@jpmorgan.com	RFC BORROWER LLC	Operating - Concentration
3448	796682987	JPMORGAN CHASE BANK, N.A.	3rd First National Plaza Chicago, IL 60602	William Sholten 312-732-4600 william.sholten@jpmorgan.com	RFC BORROWER LLC	Operating - Concentration
3449	796682979	JPMORGAN CHASE BANK, N.A.	3rd First National Plaza Chicago, IL 60602	William Sholten 312-732-4600 william.sholten@jpmorgan.com	GMACM BORROWER LLC	Operating - Concentration
3450	796682912	JPMORGAN CHASE BANK, N.A.	3rd First National Plaza Chicago, IL 60602	William Sholten 312-732-4600 william.sholten@jpmorgan.com	GMAC Mortgage, LLC	Operating - Concentration
3451	796682920	JPMORGAN CHASE BANK, N.A.	3rd First National Plaza Chicago, IL 60602	William Sholten 312-732-4600 william.sholten@jpmorgan.com	GMAC Mortgage, LLC	Operating - Concentration
3452	796682938	JPMORGAN CHASE BANK, N.A.	3rd First National Plaza Chicago, IL 60602	William Sholten 312-732-4600 william.sholten@jpmorgan.com	Residential Capital, LLC	Operating - Concentration
3453	796682946	JPMORGAN CHASE BANK, N.A.	3rd First National Plaza Chicago, IL 60602	William Sholten 312-732-4600 william.sholten@jpmorgan.com	Residential Capital, LLC	Operating - Concentration
3454	796682953	JPMORGAN CHASE BANK, N.A.	3rd First National Plaza Chicago, IL 60602	William Sholten 312-732-4600 william.sholten@jpmorgan.com	Residential Capital, LLC	Operating - Concentration
3455	185352069	M&T Bank	One M&T Plaza Buffalo, NY 14203	Karen Cranz 716-842-5383 kcranz@mtb.com	Residential Funding Company, LLC	Custodial
3456	185368842	M&T Bank	One M&T Plaza Buffalo, NY 14203	Karen Cranz 716-842-5383 kcranz@mtb.com	Residential Funding Company, LLC	Custodial
3457	185819216	M&T Bank	One M&T Plaza Buffalo, NY 14203	Karen Cranz 716-842-5383 kcranz@mtb.com	Residential Funding Company, LLC	Custodial
3458	185819307	M&T Bank	One M&T Plaza Buffalo, NY 14203	Karen Cranz 716-842-5383 kcranz@mtb.com	Residential Funding Company, LLC	Custodial
3459	185956323	M&T Bank	One M&T Plaza Buffalo, NY 14203	Karen Cranz 716-842-5383 kcranz@mtb.com	Residential Funding Company, LLC	Custodial
3460	185965522	M&T Bank	One M&T Plaza Buffalo, NY 14203	Karen Cranz 716-842-5383 kcranz@mtb.com	Residential Funding Company, LLC	Custodial
3461	BGLF / 00100446	State Street Bank and Trust Company	Two World Financial Center 225 Liberty Street, 24th Floor New York, NY 10281	Terri Rosberg 617-662-3987 tmbrownrosberg@statestreet.com	RFC Asset Holdings II, LLC	Custodial
3462	BGLM / 00100461	State Street Bank and Trust Company	Two World Financial Center 225 Liberty Street, 24th Floor New York, NY 10281	Terri Rosberg 617-662-3987 tmbrownrosberg@statestreet.com	Residential Funding Company, LLC	Custodial
3463	BGLV / 435156	State Street Bank and Trust Company	Two World Financial Center 225 Liberty Street, 24th Floor New York, NY 10281	Terri Rosberg 617-662-3987 tmbrownrosberg@statestreet.com	RFC Asset Holdings II, LLC	Custodial
3464	BGLX / 435172	State Street Bank and Trust Company	Two World Financial Center 225 Liberty Street, 24th Floor New York, NY 10281	Terri Rosberg 617-662-3987 tmbrownrosberg@statestreet.com	Residential Funding Company, LLC	Custodial
3465	BGLY / 435180	State Street Bank and Trust Company	Two World Financial Center 225 Liberty Street, 24th Floor New York, NY 10281	Terri Rosberg 617-662-3987 tmbrownrosberg@statestreet.com	Residential Funding Company, LLC	Custodial
3466	104756807830	U.S. Bank National Association	800 Nicollet Mall Minneapolis, MN 55402	Jennifer A. Norman 612-303-7348 jennifer.norman1@usbank.com	Residential Funding Company, LLC	Operating - Concentration
3467	104757811591	U.S. Bank National Association	800 Nicollet Mall Minneapolis, MN 55402	Jennifer A. Norman 612-303-7348 jennifer.norman1@usbank.com	Residential Funding Company, LLC	Operating - Disbursement
3468	104790189443	U.S. Bank National Association	800 Nicollet Mall Minneapolis, MN 55402	Jennifer A. Norman 612-303-7348 jennifer.norman1@usbank.com	RCSFJV2004 LLC	Operating - Other
3469	104790371223	U.S. Bank National Association	800 Nicollet Mall Minneapolis, MN 55402	Jennifer A. Norman 612-303-7348 jennifer.norman1@usbank.com	GMAC Mortgage, LLC	Custodial
3470	152100013191	U.S. Bank National Association	800 Nicollet Mall Minneapolis, MN 55402	Jennifer A. Norman 612-303-7348 jennifer.norman1@usbank.com	Residential Funding Company, LLC	Operating - Controlled Disbursements
3471	153910004800	U.S. Bank National Association	800 Nicollet Mall Minneapolis, MN 55402	Jennifer A. Norman 612-303-7348 jennifer.norman1@usbank.com	RFC Asset Holdings II, LLC	Operating - Other
3472	153910011920	U.S. Bank National Association	800 Nicollet Mall Minneapolis, MN 55402	Jennifer A. Norman 612-303-7348 jennifer.norman1@usbank.com	RFC Asset Management, LLC	Operating - Other
3473	153910011938	U.S. Bank National Association	800 Nicollet Mall Minneapolis, MN 55402	Jennifer A. Norman 612-303-7348 jennifer.norman1@usbank.com	RFC SFJV 2002, LLC	Operating - Other
3474	2000003496554	Wells Fargo f/k/a Wachovia Bank	420 Montgomery Street San Francisco, CA 94104	Steve Dobel dobels@wellsfargo.com	GMAC Mortgage, LLC	Custodial
3475	2000013328104	Wells Fargo f/k/a Wachovia Bank	420 Montgomery Street San Francisco, CA 94104	Steve Dobel dobels@wellsfargo.com	GMAC Mortgage, LLC	Custodial
3476	2000013330105	Wells Fargo f/k/a Wachovia Bank	420 Montgomery Street San Francisco, CA 94104	Steve Dobel dobels@wellsfargo.com	Ditech, LLC	Operating - Other
3477	2000041713451	Wells Fargo f/k/a Wachovia Bank	420 Montgomery Street San Francisco, CA 94104	Steve Dobel dobels@wellsfargo.com	Residential Funding Company, LLC	Operating - Concentration
3478	2000041713626	Wells Fargo f/k/a Wachovia Bank	420 Montgomery Street San Francisco, CA 94104	Steve Dobel dobels@wellsfargo.com	Residential Capital, LLC	Operating - Concentration
3479	2000041713668	Wells Fargo f/k/a Wachovia Bank	420 Montgomery Street San Francisco, CA 94104	Steve Dobel dobels@wellsfargo.com	GMAC Mortgage, LLC	Operating - Concentration
3480	2000041713671	Wells Fargo f/k/a Wachovia Bank	420 Montgomery Street San Francisco, CA 94104	Steve Dobel dobels@wellsfargo.com	Residential Funding Company, LLC	Operating - Concentration
3481	2000041713781	Wells Fargo f/k/a Wachovia Bank	420 Montgomery Street San Francisco, CA 94104	Steve Dobel dobels@wellsfargo.com	Passive Asset Transactions LLC	Operating - Concentration
3482	2000041713956	Wells Fargo f/k/a Wachovia Bank	420 Montgomery Street San Francisco, CA 94104	Steve Dobel dobels@wellsfargo.com	RFC Asset Holdings II, LLC	Operating - Concentration

Privileged and Confidential

Exhibit B - Bank Accounts

Ref #	Account Number	Bank	Address	Contact	Corporate/Company Code	Account Type
3483	2000041713969	Wells Fargo f/k/a Wachovia Bank	420 Montgomery Street San Francisco, CA 94104	Steve Dobel dobels@wellsfargo.com	Residential Mortgage Real Estate Holdings, LLC	Operating - Collection
3484	2000041713972	Wells Fargo f/k/a Wachovia Bank	420 Montgomery Street San Francisco, CA 94104	Steve Dobel dobels@wellsfargo.com	Residential Funding Real Estate Holdings, LLC	Operating - Concentration
3485	2000041713985	Wells Fargo f/k/a Wachovia Bank	420 Montgomery Street San Francisco, CA 94104	Steve Dobel dobels@wellsfargo.com	Homecomings Financial Real Estate Holdings, LLC	Operating - Concentration
3486	2000041714353	Wells Fargo f/k/a Wachovia Bank	420 Montgomery Street San Francisco, CA 94104	Steve Dobel dobels@wellsfargo.com	GMAC Mortgage, LLC	Operating - Concentration
3487	2000041714706	Wells Fargo f/k/a Wachovia Bank	420 Montgomery Street San Francisco, CA 94104	Steve Dobel dobels@wellsfargo.com	Residential Funding Company, LLC	Operating - Concentration
3488	2000042898511	Wells Fargo f/k/a Wachovia Bank	420 Montgomery Street San Francisco, CA 94104	Steve Dobel dobels@wellsfargo.com	Residential Capital, LLC	Operating - Concentration
3489	2000042898663	Wells Fargo f/k/a Wachovia Bank	420 Montgomery Street San Francisco, CA 94104	Steve Dobel dobels@wellsfargo.com	Residential Capital, LLC	Operating - Concentration
3490	2000042898676	Wells Fargo f/k/a Wachovia Bank	420 Montgomery Street San Francisco, CA 94104	Steve Dobel dobels@wellsfargo.com	Residential Funding Company, LLC	Operating - Concentration
3491	2000042898689	Wells Fargo f/k/a Wachovia Bank	420 Montgomery Street San Francisco, CA 94104	Steve Dobel dobels@wellsfargo.com	GMAC Mortgage, LLC	Operating - Concentration
3492	2000042911388	Wells Fargo f/k/a Wachovia Bank	420 Montgomery Street San Francisco, CA 94104	Steve Dobel dobels@wellsfargo.com	Residential Capital, LLC	Operating - Concentration
3493	2000042911867	Wells Fargo f/k/a Wachovia Bank	420 Montgomery Street San Francisco, CA 94104	Steve Dobel dobels@wellsfargo.com	GMAC Mortgage, LLC	Operating - Concentration
3494	2000042911870	Wells Fargo f/k/a Wachovia Bank	420 Montgomery Street San Francisco, CA 94104	Steve Dobel dobels@wellsfargo.com	Residential Funding Company, LLC	Operating - Concentration
3495	2000042922607	Wells Fargo f/k/a Wachovia Bank	420 Montgomery Street San Francisco, CA 94104	Steve Dobel dobels@wellsfargo.com	GMAC Mortgage, LLC	Operating - Concentration
3496	2000045277618	Wells Fargo f/k/a Wachovia Bank	420 Montgomery Street San Francisco, CA 94104	Steve Dobel dobels@wellsfargo.com	Residential Funding Company, LLC	Restricted Cash - Other
3497	2000045277621	Wells Fargo f/k/a Wachovia Bank	420 Montgomery Street San Francisco, CA 94104	Steve Dobel dobels@wellsfargo.com	Residential Funding Company, LLC	Operating - Concentration
3498	2000045278963	Wells Fargo f/k/a Wachovia Bank	420 Montgomery Street San Francisco, CA 94104	Steve Dobel dobels@wellsfargo.com	RFC Asset Holdings II, LLC	Operating - Concentration
3499	2000045278976	Wells Fargo f/k/a Wachovia Bank	420 Montgomery Street San Francisco, CA 94104	Steve Dobel dobels@wellsfargo.com	Passive Asset Transactions LLC	Operating - Concentration
3500	2000049234945	Wells Fargo f/k/a Wachovia Bank	420 Montgomery Street San Francisco, CA 94104	Steve Dobel dobels@wellsfargo.com	GMAC Mortgage, LLC	Operating - Other
3501	2000049259043	Wells Fargo f/k/a Wachovia Bank	420 Montgomery Street San Francisco, CA 94104	Steve Dobel dobels@wellsfargo.com	GMAC Mortgage, LLC	Custodial
3502	2000049281176	Wells Fargo f/k/a Wachovia Bank	420 Montgomery Street San Francisco, CA 94104	Steve Dobel dobels@wellsfargo.com	GMAC Mortgage, LLC	Operating - Disbursement
3503	2000062860066	Wells Fargo f/k/a Wachovia Bank	420 Montgomery Street San Francisco, CA 94104	Steve Dobel dobels@wellsfargo.com	GMAC Mortgage, LLC	Operating - General
3504	2000201447570	Wells Fargo f/k/a Wachovia Bank	420 Montgomery Street San Francisco, CA 94104	Steve Dobel dobels@wellsfargo.com	Residential Consumer Services, LLC	Operating - Disbursement
3505	2100003508957	Wells Fargo f/k/a Wachovia Bank	420 Montgomery Street San Francisco, CA 94104	Steve Dobel dobels@wellsfargo.com	GMAC Mortgage, LLC	Operating - Receipt
3506	2100012536910	Wells Fargo f/k/a Wachovia Bank	420 Montgomery Street San Francisco, CA 94104	Steve Dobel dobels@wellsfargo.com	GMAC Mortgage, LLC	Operating - Concentration
3507	2100012764397	Wells Fargo f/k/a Wachovia Bank	420 Montgomery Street San Francisco, CA 94104	Steve Dobel dobels@wellsfargo.com	GMAC Mortgage, LLC	Operating - Concentration
3508	2100013597877	Wells Fargo f/k/a Wachovia Bank	420 Montgomery Street San Francisco, CA 94104	Steve Dobel dobels@wellsfargo.com	GMAC Mortgage, LLC	Operating - Other
3509	2100018442642	Wells Fargo f/k/a Wachovia Bank	420 Montgomery Street San Francisco, CA 94104	Steve Dobel dobels@wellsfargo.com	GMAC Mortgage, LLC	Custodial
3510	2100018445128	Wells Fargo f/k/a Wachovia Bank	420 Montgomery Street San Francisco, CA 94104	Steve Dobel dobels@wellsfargo.com	GMAC Mortgage, LLC	Custodial
3511	2100018492090	Wells Fargo f/k/a Wachovia Bank	420 Montgomery Street San Francisco, CA 94104	Steve Dobel dobels@wellsfargo.com	GMAC Mortgage, LLC	Custodial
3512	2100018728719	Wells Fargo f/k/a Wachovia Bank	420 Montgomery Street San Francisco, CA 94104	Steve Dobel dobels@wellsfargo.com	GMAC Mortgage, LLC	Custodial
3513	2100018747978	Wells Fargo f/k/a Wachovia Bank	420 Montgomery Street San Francisco, CA 94104	Steve Dobel dobels@wellsfargo.com	GMAC Mortgage, LLC	Custodial
3514	2100018906311	Wells Fargo f/k/a Wachovia Bank	420 Montgomery Street San Francisco, CA 94104	Steve Dobel dobels@wellsfargo.com	GMAC Mortgage, LLC	Custodial

EXHIBIT C

ResCap Bank Account Structure

ResCap Bank Account Structure | Map 1 – Residential Capital, LLC

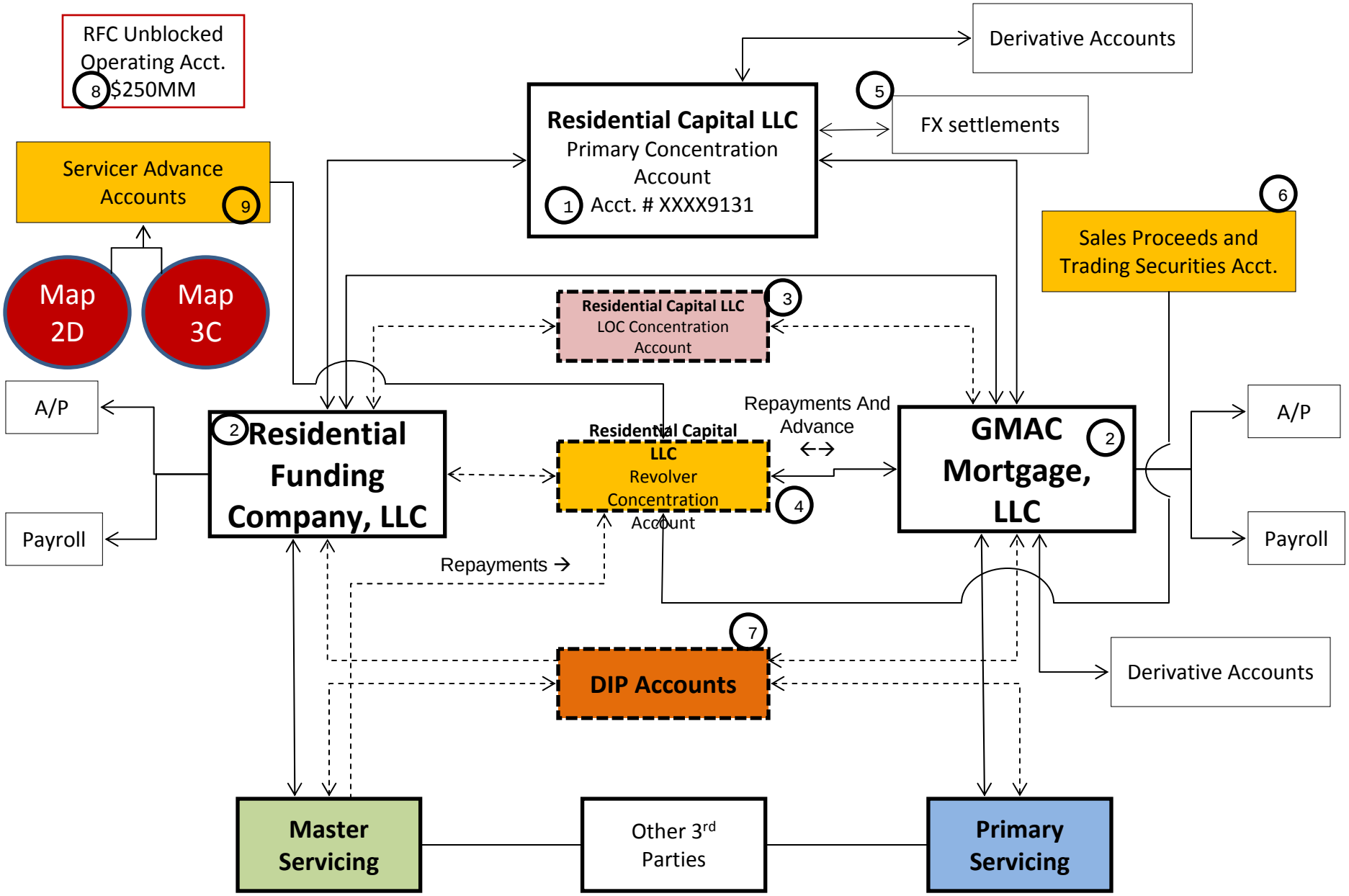

ResCap Bank Account Structure | Map 2 – Primary Servicing High Level Custodial Process

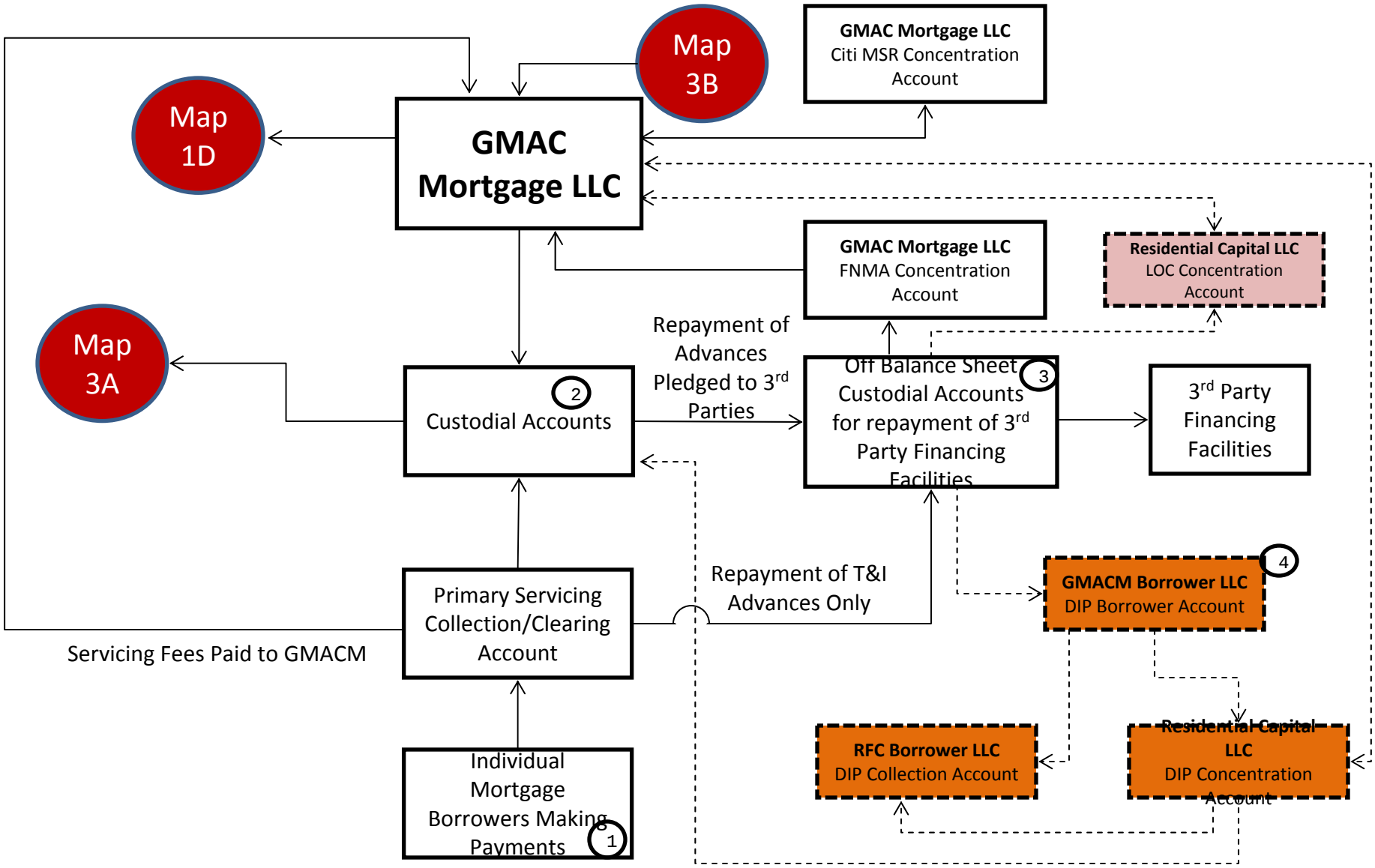
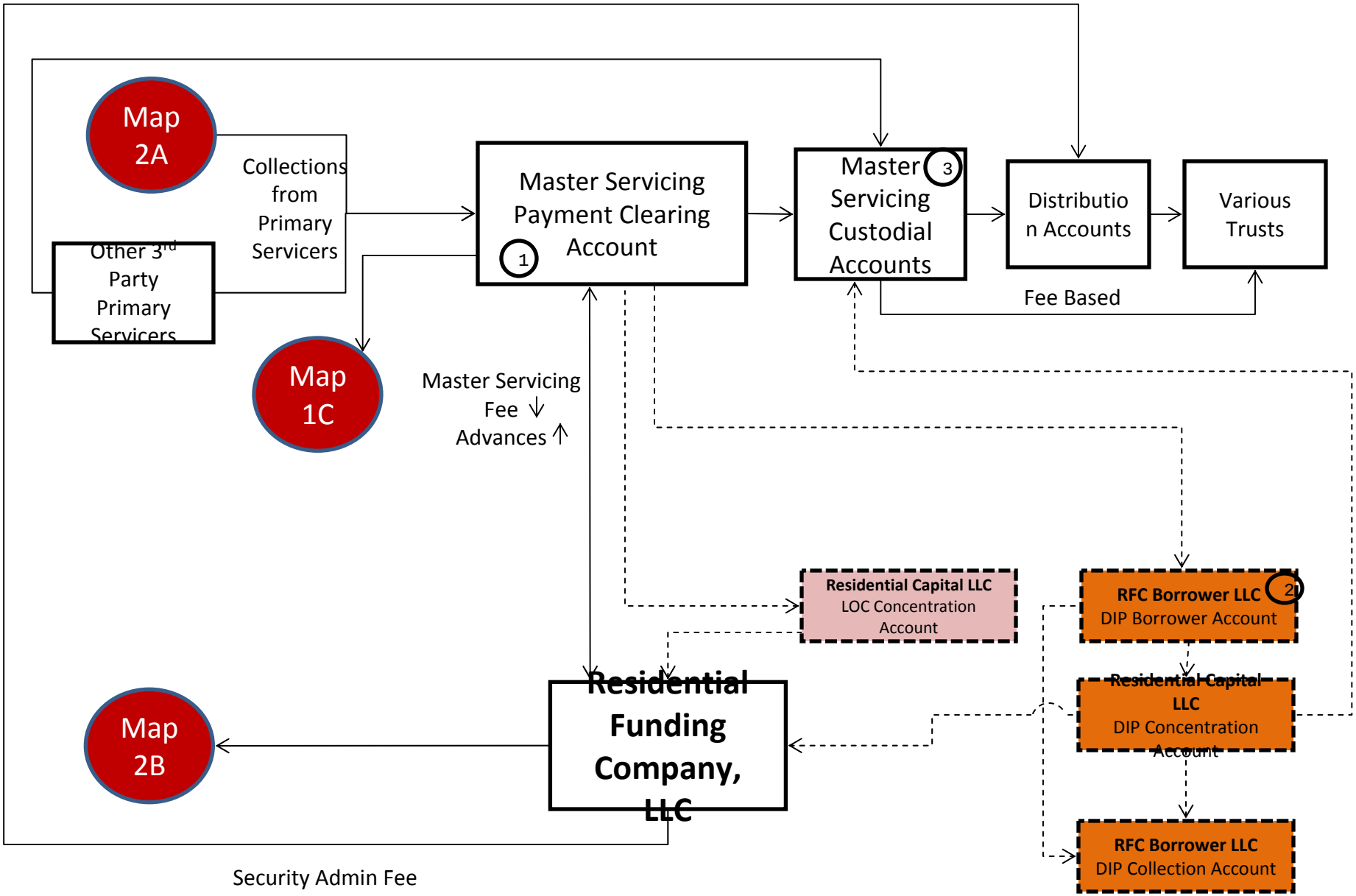
ResCap Bank Account Structure | Map 3 – Master Servicing High Level Custodial Process